CTV Armaturen & Penstocks GmbH

Print December. 2022

Valves for Water Supply and Sewage

Products

Group	
01	Resilient Seated Gate Valves
02	Metal Seated Gate Valves
05	Knife Gate Valves
06	Check Valves
09	Butterfly Valves
10	Wafer Butterfly Valves
11	Air Release Valves
13	Plunger / Needle Valves
14	Strainers
43	Dismantling Joints
21	Penstocks - Sluice Gate Valve

Your contact for water and wastewater:

CTV Armaturen & Penstocks GmbH

Pliniusstrasse 6

D-48488 Emsburen

Germany

Telefon +49 (0)5903 217 68 66

info@ctv-valves.com

www.ctv-valves.com

Every requirement is fulfilled perfectly here.

As manufacturers, CTV Armaturen & Penstocks GmbH has a wide range of valves in the water and waste water matters sector. Individually manufactured special valves and complete solutions are also part of our range of products.

Our customers' satisfaction has top priority for us and has been confirmed by certification in accordance with ISO 9001:2015. A further fundamental proof of safety is confirmed by our valves' conformity in the sense of the Pressure Equipment Directive 97/23/EC with the CE marking. In addition, most of our valves are certified in accordance with the regulations required by the German Technical and Scientific Association for Water, DVGW and are certified as Made in Germany - Made in EU.

Mission & Vision Statement.

VISION STATEMENT

CTV Armaturen & Penstocks GmbH strives to be a leading global manufacturer of high-quality flow control products for the Potable Water and Sewage markets.

MISSION STATEMENT

CTV Armaturen & Penstocks GmbH is a specialized manufacturer of high-quality flow control products, hand operated as well as motorized, like Gate Valves, Butterfly Valves, Non-Return Valves, Sluice Gate Valves/ Penstocks and other appendages according to the latest German standards.
In an ongoing effort to meet the different requirements of our customers and market demands, we are dedicated and driven to continually improve and develop products targeting the consistent ability to provide the highest levels of customer satisfaction. From concept to design, utilizing the best technologies available, our products are engineered and manufactured for proven product performance and will meet the highest standard of environmental and social responsibility.
We aim to become the leading German valve and penstock supplier, with commitment to both quality and service. We are focused on achieving continuous growth and profitability for the company by creating value for the customers, employees, shareholders and the environment we serve.

STATEMENT OF VALUES

- We strive to always exceed customer expectations and provide service excellence.
- We believe our people are the company's greatest asset and primary source of strength.
- We expect honesty, integrity, accountability, commitment, and ethical values.
- We treat each other with respect and dignity to maintain a positive work environment.
- We foster diversity, encourage collaboration, promote ingenuity and embrace teamwork.
- We focus on new product development and seek continual improvement.
- We view challenges as opportunities by embracing and driving organizational change.
- We take pride in our work and place extreme value on quality and safety.
- We maintain social awareness and contribute positively to our communities and environment.
- We are competitive and passionate people who make time to have fun and celebrate successes.
- We view the future with an optimistic outlook for success!

CTV has been certified and approved according the below high-level international and German industry standards and norms in order to offer our customers solid and reliable products:

DVGW CE DIN EN ISO 9001 DIN EN ISO 3834 DIN EN 1090 Made in GERMANY

DIN-DVGW-Baumusterprüfzertifikat

DIN-DVGW type examination certificate

NW-6201CO0433
Registriernummer
registration number

Anwendungsbereich ***field of application***	Produkte der Wasserversorgung *products of water supply*
Zertifikatinhaber ***owner of certificate***	CTV Armaturen & Penstocks GmbH Pliniusstraße 6, D-48488 Emsbüren
Vertreiber ***distributor***	CTV Armaturen & Penstocks GmbH Pliniusstraße 6, D-48488 Emsbüren
Produktart ***product category***	Armaturen für die Wasserversorgung: Absperrklappe (6201)
Produktbezeichnung ***product description***	Absperrklappe für die Trinkwasserversorgung mit Flanschen
Modell ***model***	CTV Typ 09...
Prüfberichte ***test reports***	Kontrollprüfung Labor: AO 092/18 vom 07.01.2019 (TZW) Baumusterprüfung: A 010/11 vom 11.12.2013 (TZW) UBA-Leitlinie: K-261231-15-s vom 05.10.2015 (WHY) Mikrobiologische Prüfung: W-254529e-15-Sl/le vom 10.03.2015 (WHY)
Prüfgrundlagen ***test basis***	DVGW W 363-(P) (01.06.2010) DIN EN 1074-1 (01.07.2000) DIN EN 1074-2 (01.07.2004) UBA METALLE (21.11.2018) UBA ELASTOM (16.03.2016) UBA KTW (07.03.2016) DVGW W 270 (01.11.2007)
Ablaufdatum / AZ ***date of expiry / file no.***	11.12.2023 / 19-0519-WNA

70028-04-A-DE

05.09.2019 GI A-1/2
Datum, Bearbeiter, Blatt, Leiter der Zertifizierungsstelle
date, issued by, sheet, head of certification body

DVGW CERT GmbH ist von der DAkkS nach DIN EN ISO/IEC 17065:2013 akkreditierte Stelle für die Zertifizierung von Produkten der Energie- und Wasserversorgung.

DVGW CERT GmbH is an accredited body by DAkkS according to DIN EN ISO/IEC 17065:2013 for certification of products for energy and water supply industry.

DAkkS
Deutsche Akkreditierungsstelle
D-ZE-16028-01-05

DVGW CERT GmbH
Zertifizierungsstelle
Josef-Wirmer-Str. 1-3
53123 Bonn
Tel. +49 228 91 88 - 888
Fax +49 228 91 88 - 993
www.dvgw-cert.com
info@dvgw-cert.com

ZERTIFIKAT

CERTIFICATE CERTIFICAT CERTIFICADO СЕРТИФИКАТ

ZDH ZERT

DIN EN ISO 9001

ZDH-ZERT GMBH CERTIFIES THAT THE ORGANIZATION

CTV ARMATUREN & PENSTOCKS GMBH
PLINIUSSTR. 6
48488 EMSBÜREN

CTV Armaturen & Penstocks GmbH

IN THE SCOPE OF

PRODUCTION, TRADE AND DISTRIBUTION OF VALVES AND GATE VALVES, BUTTERFLY VALVES AND PENSTOCKS FOR THE WATER, SEWAGE AND GAS INDUSTRY AS WELL AS FOR THE INDUSTRIAL AND ENERGY INDUSTRY

HAS INTRODUCED AND APPLIES A QUALITY MANAGEMENT SYSTEM IN ACCORDANCE WITH THE FOLLOWING STANDARD:

DIN EN ISO 9001:2015

THE RESPECTIVE VERIFICATION WAS BROUGHT BY AN ASSESSMENT OF THIS ORGANIZATION.

CERTIFICATE VALID UNTIL 16.07.2022
CERTIFICATE REGISTRATION NO.: Q1 0119131
Bonn, 17.07.2019

Dipl.-Ing. Peter Löpp
Head of Certification Body

IAF

DAkkS Deutsche Akkreditierungsstelle D-ZM-16013-01-02

ZDH-ZERT GMBH | WURZERSTR. 4A | 53175 BONN

WRAS
APPROVED PRODUCT

This certifies that

CTV ARMATUREN & PENSTOCKS GMBH

has had the undermentioned product(s) examined, tested and certified as being of an appropriate quality and standard as required in the Water Supply (Water Fittings) Regulations and Scottish Water Byelaws, subject to scheme requirements being met when installed.

Model Numbers

CTV TYP 09 (Z) BUTTERFLY VALVES

The certificate by itself is not evidence of a valid WRAS Approval. Confirmation of the current status of an approval must be obtained from the WRAS Approvals Directory (www.wras.co.uk/directory)

The product so mentioned will be valid until the end of:

July 2021

Certificate No.

1607399

Ian Hughes,
WRAS Approvals Manager

ZERTIFIKAT

CERTIFICATE CERTIFICAT CERTIFICADO СЕРТИФИКАТ

ZDH ZERT

DIN EN 1090

KONFORMITÄT DER WERKSEIGENEN PRODUKTIONSKONTROLLE (WPK)

2499 – CPR -0119131-00-01

GEMÄSS DER VERORDNUNG (EU) NR: 305/2011 DES EUROPÄISCHEN PARLAMENTES UND DES RATES VOM 09.03.2011 (BAUPRODUKTENVERORDNUNG-CPR) GILT DIESES ZERTIFIKAT FÜR:

HERSTELLER:	**CTV ARMATUREN & PENSTOCKS GMBH** PLINIUSSTRAßE 6 D - 48488 EMSBÜREN
HERSTELLWERK:	WIE VORSTEHEND GENANNT
HARMONISIERTE PRODUKTNORM:	EN 1090-1:2009 + A1:2012-02
BAUPRODUKT(E):	STAHLTRAGWERKE UND BAUSÄTZE BIS EXC3 NACH EN 1090-2
VERWENDUNGSZWECK:	FÜR TRAGENDE ZWECKE IN ALLEN ARTEN VON BAUWERKEN
HERSTELLUNGSUMFANG:	PRODUKTION: SCHNEIDEN-LOCHEN-FORMGEBEN, SCHWEIßEN INKLUSIVE ZFP (PT2, MT2) UND MECHANISCHES VERBINDEN
GÜLTIGKEITSBEGINN:	10.06.2020
NÄCHSTE ÜBERWACHUNG:	16.07.2021 (VOR-ORT-INSPEKTION)
ANMERKUNGEN:	ZU DIESEM ZERTIFIKAT GEHÖREN EINE ANLAGE UND DAS/DIE SCHWEISSZERTIFIKAT(E) NR.: **SCH 0119131-00-01**

Bonn, 09.07.2020

Dipl.-Ing. René Lövenich
Leiter der Zertifizierungsstelle

DAkkS
Deutsche Akkreditierungsstelle
D-ZE-16013-01-00

ZERTIFIKAT

CERTIFICATE CERTIFICAT CERTIFICADO СЕРТИФИКАТ

ZDH ZERT

DIN EN ISO 3834

ZDH-ZERT GMBH BESCHEINIGT, DASS DIE ORGANISATION

CTV ARMATUREN & PENSTOCKS GMBH
PLINIUSSTRAßE 6
D - 48488 EMSBÜREN

DEN NACHWEIS ERBRACHT HAT, DIE SCHWEISSTECHNISCHEN QUALITÄTSANFORDERUNGEN GEMÄSS DEM IN DER ANLAGE ANGEGEBENEN UMFANG NACH

DIN EN ISO 3834-2

ZU ERFÜLLEN.

ZERTIFIKAT GÜLTIG VOM 10.06.2020 BIS 16.07.2021
ZERTIFIKAT-REGISTER-NR.: **QMS 0119131-00-01**
Bonn, 09.07.2020

Dipl.-Ing. René Lövenich
Leiter der Zertifizierungsstelle

DAkkS
Deutsche Akkreditierungsstelle
D-ZE-16013-01-00

Tel : (+31) (0)88 45 05 500
Mail : industrienederland@nl.bureauveritas.com
Office : Amersfoort
Country: The Netherlands

WELDING PROCEDURE QUALIFICATION RECORD

N° WPQR BVAMF : 6792710- 071

Manufacturer	: CTV Armaturen & Penstocks GmbH
Place of welding	: Enschede
Date of welding	: 23-03-2020
pWPS No	: CTV 002-M
Reference standard	: EN 15614-1 edition 2017 Level: 2
Supplemented by	:
Test verified by	: B.Moorman representing Bureau Veritas Stamp No

BUREAU VERITAS

Certifies that test pieces were prepared, welded and tested satisfactorily in accordance with the requirements of the documents indicated above.

Record issued on : 24-04-2020

Examining body	Manufacturer
Authorized representative : J.H.J.M.Brouwer Signature : Stamp of the examining body	Represented by : CTV Armaturen & Penstocks GmbH Signature : Stamp of the manufacturer (optionnal) CTV Armaturen & Penstocks GmbH Pliniusstrasse 6 48488 Emsbüren Deutschland - Germany WWW.CTV-VALVES.COM Chamber of Commerce: HRB-213681

Other identification (as necessary) :

Tel : (+31) (0)88 45 05 500
Mail : industrienederland@nl.bureauveritas.com
Office : Amersfoort
Country: The Netherlands

WELDING PROCEDURE QUALIFICATION RECORD

N° WPQR BVAMF : 6792710- 068

Manufacturer	: CTV Armaturen & Penstocks GmbH
Place of welding	: Enschede
Date of welding	: 23-03-2020
pWPS No	: CTV 001-M
Reference standard	: EN 15614-1 edition 2017 Level: 2
Supplemented by	:
Test verified by	: B.Moorman representing Bureau Veritas Stamp No

BUREAU VERITAS

Certifies that test pieces were prepared, welded and tested satisfactorily in accordance with the requirements of the documents indicated above.

Record issued on : 24-04-2020

Examining body	Manufacturer
Authorized representative : J.H.J.M. Brouwer Signature : Stamp of the examining body	Represented by : CTV Armaturen & Penstocks GmbH Signature : Stamp of the manufacturer (optionnal) CTV Armaturen & Penstocks GmbH Pliniusstrasse 6 48488 Emsbüren Deutschland - Germany WWW.CTV-VALVES.COM Chamber of Commerce: HRB-213681

Other identification (as necessary) :

Resilient seated wedge gate valves

01

Resilient seated wedge gate valves
PN10/16 (DN40 – DN1200) | PN25 (DN40 – DN500)

Product features:

- Design acc. to DIN EN 1171
- Internal, non-rising stem
- Double flanged connection acc. to DIN EN 1092-2
- Face to face dimension acc. to DIN EN 558, Series 14 (F4) or Series 15 (F5)
- Resilient seated in both directions of flow
- Solid rubber wedge made of elastomer with wedge drainage
- 100 % free flow passage with smooth inner pipe bottom, trouble-free piggable
- Long, centred wedge guide
- Back-sealing, exchangeable shaft sealing under full working pressure
- **Available in accordance with DVGW GW 336**

Materials (basic version):

- Body and bonnet of ductile cast iron EN-GJS-400-15 (GGG-40)
- Spindle made of A2
- Spindle nut made of bronze
- Spindle collar supported on POM sliding discs
- Connecting bolts made of A2, countersunk and sealed
- Corrosion protection by means of fusion bonded epoxy powder coating blue, RAL 5015 (average dry film thickness >250µm)
- Drinking water version: EPDM rubber coating of wedge in accordance with KTW and DVGW worksheet W 270
- Waste water version: NBR rubber coating of wedge

Other materials as well as accessories on request

Detail 1:
Dynamic spindle seal by means of O-rings in double safety design Medium-unaffected stem bearing by means of O-ring. Bearing bush of POM guarantees a safe and long working life.

Detail 2:
Long centred wedge guide guarantees high sealing function and low operating forces.

DVGW product

DN40-400

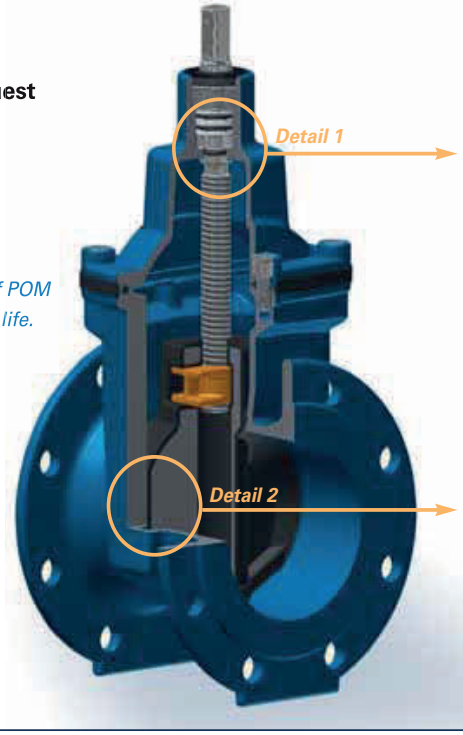

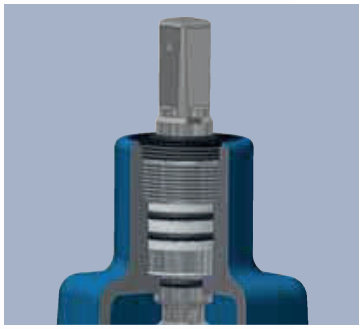

Fields of application:

Water, energy and industrial management
e.g. for drinking water, raw water, purified waste water, air, etc.

Chemical industry
e.g. for chemically polluted waste water, etc.

Food industry and breweries
e.g. for washing and rinsing plants, conveyor plants, etc.

Biogas plants

Further possibilities of application on request

Drive options:

Basic version

01-2001410/-16

Resilient seated wedge gate valves with bare spindle end
for mounting spindle extensions, square caps etc.
DN40 – DN1200

01-2011410/-16

Resilient seated wedge gate valves with non-rising spindle and handwheel
DN40 – DN1200

or with interposed spur gear or bevel gear box

01-2131410/-16

Resilient seated wedge gate valves with chain wheel
Chain made of stainless steel or galvanized steel

or with interposed spur gear or bevel gear box

01-2181510/-16

Resilient seated wedge gate valves for underground or direct buried installation
to customer specifications

or with interposed spur gear or bevel gear box

Available in accordance with DVGW GW 336

Subject to technical changes as well as the use of equivalent or higher quality materials. All representations are not binding.

Drive options:

01-2031410/-16

Resilient seated wedge gate valves with direct mounted electric actuator or modulating electric actuator

or with interposed spur gear or bevel gear box

Basic version

01-2271410/-16

Resilient seated wedge gate valves with connecting flange
for mounting of electric or, pneumatic actuators etc.

01-2151410/-16

Resilient seated wedge gate valves with pneumatic actuators
double-acting

Medium controlled
on request

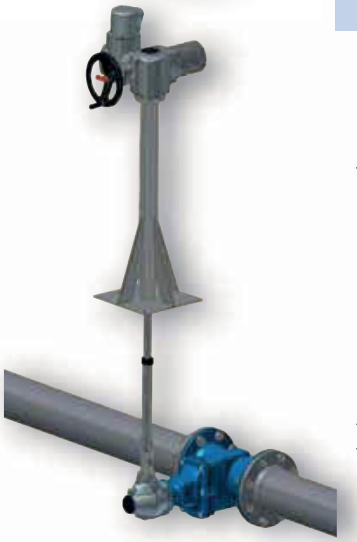

01-2181510/-16

Resilient seated wedge gate valves for underground or direct buried installation
to customer specifications
DN40 – DN250

or with interposed spur gear or bevel gear box
DN300 – DN600

Available in accordance with DVGW GW 336

Subject to technical changes as well as the use of equivalent or higher quality materials. All representations are not binding.

CTV Armaturen & Penstocks GmbH

Modell 01:
Absperrschieber nach DIN EN1171

weichdichtend - freies Wellenende - F4 - PN10, PN16
aus Gusseisen mit Kugelgraphit nach EN-GJS-400-15

Type 01:
Gate Valve acc. DIN EN1171

resilietseated-Bare Shaft-F4-PN10,PN16
of ductile cast iron acc. to EN-GJS-400-15

DN 50 - DN 600

CTV Armaturen & Penstocks GmbH, Pliniusstrasse 6, 48488 Emsbüren, Deutschland
Tel: +49 (0)5903 217 6866, Email: info@ctv-valves.com

Absperrschieber
Gate Valve

CTV Armaturen & Penstocks GmbH

Verwendungsbereich: Wasser Range of application: Potable water				
Nennweite Size DN	Nenndruck Pressure rating PN	Wasser-Prüfdruck in bar Hydrost. test pressure in bar Gehäuse / Body	Sitz / Seat	Zulässiger Betriebsdruck in bar Admissible working pressure in bar bis 70°C / up to 70°C
50 - 600	10. - 16	15 - 24	11. - 17,6	10. - 16

Im Auftragsfall bitte Betriebsverhältnisse angeben.
In case of order please specify the working conditions

Werkstoffe / Zubehör, Materials / Equipment		
Katalog-Nr. / Catalogue No.		**01-BareShaft-F4-0001**
Gehäuse	Body	GGG (EN-GJS-400-15)
Haube	bonnet	GGG (EN-GJS-400-15)
Keil	wedge	GGG (EN-GJS-400-15)
Keilgummierung	wedge rubber	EPDM oder NBR / EPDM or NBR
Spindel	stem	1.4021 / 1.4571
Spindelmutter	stem nut	Bronze / Bronze
*Epoxid-Pulverbeschichtung, blau / epoxy powder coating, blue (Min 250 µm) andere Materialien auf Anfrage / other materials on request		

Nenn-weite Size	Baulänge nach Face to face length acc. to DIN EN 558-1 Series 14	Flansch Flange Ø		Maße Dimensions				Gewicht Weight	
DN mm	L mm	D mm		H_1 mm		H_2 mm	V mm	~ kg	
		PN10	PN16	PN10	PN16			PN10	PN16
50	150	165	165	83	83	214	14	9,5	9,5
65	170	185	185	93	93	258	17	13,5	13,5
80	180	200	200	100	100	284	17	15,5	15,5
100	190	220	220	110	110	320	19	21,5	21,5
125	200	250	250	125	125	387	19	27,5	27,5
150	210	285	285	143	143	426	19	33,5	33,5
200	230	340	340	170	170	531	24	60	60
250	250	395	405	198	203	634	27	125	126
300	270	445	460	223	230	742	27	127	129
350	290	505	520	253	260	827	27	156	156
400	310	565	580	283	290	953	32	189	189
450	330	615	640	308	308	1032	36	249	251
500	350	670	715	225	357	1153	36	289	293
600	390	780	840	390	420	1291	36	412	416

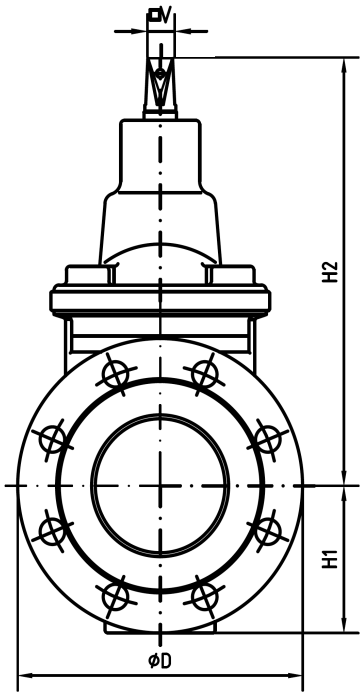

Technische Änderungen vorbehalten
We reserve the right to make technical modifications

17.05.2022 - 01-BareShaft-F4-0001

Modell 01: Absperrschieber nach DIN EN 1171

CTV Armaturen & Penstocks GmbH

weichdichtend-F4
Baulänge nach DIN EN 558-1 Reihe 14
PN 10, PN16 aus Gusseisen mit Kugelgraphit GGG

Type 01: Gate Valve acc. to EN DIN 1171

resilient seated - F4
face to face length acc. to DIN EN 558-1 series 14 PN 10, PN16 of ductile cast iron GGG

DN700 -DN1200

CTV Armaturen & Penstocks GmbH, Pliniusstrasse 6, 48488 Emsbüren, Deutschland
Tel: +49 (0)5903 217 6866, Email: info@ctv-valves.com

ISO 9001:2015 ISO 3834

Absperrschieber
Gate Valve

CTV Armaturen & Penstocks GmbH

Verwendungsbereich: Abwasser und Trinkwasser. Alle Medienberührende Teile nach UBA-KTW und DVGW W270 Range of application: Sewage and Drinking Water. All contact parts according to UBA-KTW and DVGW W270				
Nennweite Size DN	Nenndruck Pressure rating PN	Wasser-Prüfdruck in bar Hydrost. test pressure in bar Gehäuse / Body	 Sitz / Seat	Zulässiger Betriebsdruck in bar Admissible working pressure in bar bis 80°C / up to 80°C
700 - 1200	10, 16	15, 24	11, 17,6	10, 16

Im Auftragsfall bitte Betriebsverhältnisse angeben.
In case of order please specify the working conditions

Werkstoffe / Zubehör, Materials / Equipment		
Katalog-Nr. / Catalogue No.		**01-PN10-PN16-DN700-1200-002**
Gehäuse	Body	GGG 50 / GGG 50
Keil	wedge	GGG 50 + EPDM oder NBR/ GGG 50 + EPDM or NBR
Deckel	bonnet	GGG 50 / GGG 50
Spindel	stem	Edelstahl V2A-SS-420 / Stainless Steel A2-SS-420
Schrauben	bolts	Edelstahl V2A-SS-304 / Stainless Steel A2-SS-304
Beschichtung	Coating	Epoxy Coating RAL 5015 min 250 µm

Nenn-weite Size	Baulänge nach Face to face length acc. to DIN EN 558-1 Series 14	Maße Dimensions						Drehmo-ment torque
DN mm	L mm	g mm		c mm		d mm		Nm
		PN10	PN16	PN10	PN16	PN10	PN16	
700	430	794	794	840	840	910	910	1100
800	470	901	901	950	950	1025	1025	1250
900	510	1001	1001	1050	1050	1125	1125	1080
1000	550	1112	1112	1160	1170	1255	1255	1200
1200	630	1328	1328	1380	1380	1485	1485	1440

Technische Änderungen vorbehalten
We reserve the right to make technical modifications

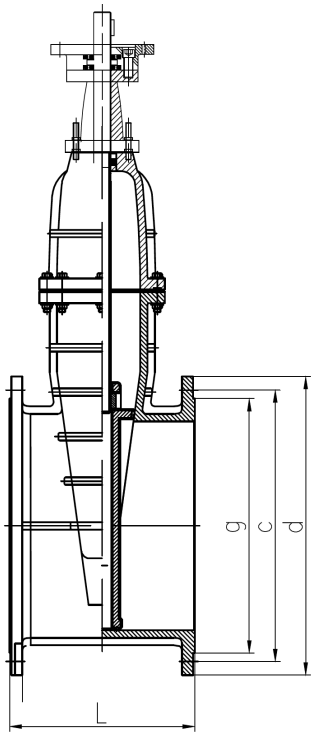

13.07.2022 - 01-PN10-PN16-DN700-1200-002

CTV Armaturen & Penstocks GmbH, Pliniusstrasse 6, 48488 Emsbüren, Deutschland
Tel: +49 (0)5903 217 6866, Email: info@ctv-valves.com

CTV Armaturen & Penstocks GmbH

Modell 01: Absperrschieber nach DIN EN1171

weichdichtend - IsoTop Flansch - F4 - PN10, PN16
aus Gusseisen mit Kugelgraphit nach EN-GJS-400-15

Type 01: Gate Valve acc. DIN EN1171

resiliet seated - mounting flange - F4 - PN10, PN16
of ductile cast iron acc. to EN-GJS-400-15

DN 50 - DN 600

CTV Armaturen & Penstocks GmbH, Pliniusstrasse 6, 48488 Emsbüren, Deutschland
Tel: +49 (0)5903 217 6866, Email: info@ctv-valves.com

Absperrschieber
Gate Valve

CTV Armaturen & Penstocks GmbH

Verwendungsbereich: Wasser Range of application: Potable water				
Nennweite Size DN	Nenndruck Pressure rating PN	Wasser-Prüfdruck in bar Hydrost. test pressure in bar Gehäuse / Body	Sitz / Seat	Zulässiger Betriebsdruck in bar Admissible working pressure in bar bis 70°C / up to 70°C
50 - 600	10. - 16	15 - 24	11. - 17,6	10. - 16

Im Auftragsfall bitte Betriebsverhältnisse angeben.
In case of order please specify the working conditions

Werkstoffe / Zubehör, Materials / Equipment		
Katalog-Nr. / Catalogue No.		**01-ISOTop-F4-0003**
Gehäuse	Body	GGG (EN-GJS-400-15)
Haube	bonnet	GGG (EN-GJS-400-15)
Keil	wedge	GGG (EN-GJS-400-15)
Keilgummierung	wedge rubber	EPDM oder NBR / EPDM or NBR
Spindel	stem	1.4021 / 1.4571
Spindelmutter	stem nut	Bronze / Bronze
*Epoxid-Pulverbeschichtung, blau / epoxy powder coating, blue (Min 250 µm) andere Materialien auf Anfrage / other materials on request		

Nenn-weite Size	Baulänge nach Face to face length acc. to DIN EN 558-1 Series 14	Flansch Flange Ø		Maße Dimensions				Gewicht Weight		Volumen Volume
DN mm	L mm	D mm PN10	PN16	H_1 mm	H_2 mm	h mm	W mm	~ kg PN10	PN16	~ m³
50	150	165	165	83	180	45	16	10,5	10,5	0,008
65	170	185	185	93	211	45	20	14,5	14,5	0,011
80	180	200	200	100	237	45	20	16,5	16,5	0,014
100	190	220	220	110	280	45	20	22,5	22,5	0,018
125	200	250	250	125	332	45	20	28,5	28,5	0,025
150	210	285	285	143	371	45	20	35,5	35,5	0,033
200	230	340	340	174	474	45	20	62	62	0,054
250	250	395	405	203	570	60	30	127	129	0,084
300	270	445	460	230	668	60	30	129	131	0,119
350	290	505	520	260	753	60	30	158	158	0,162
400	310	565	580	290	860	60	30	191	191	0,218
450	330	615	640	320	1062	60	30	251	253	0,305
500	350	670	715	357	1062	60	30	291	295	0,37
600	390	780	840	420	1231	60	30	414	418	0,561

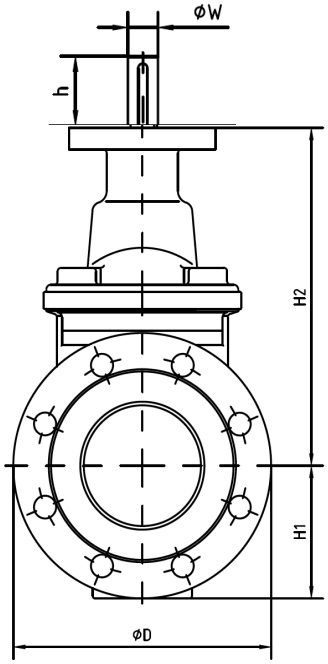

Technische Änderungen vorbehalten
We reserve the right to make technical modifications

13.07.2022-01-ISOTop-F4-0003

CTV Armaturen & Penstocks GmbH

Modell 01: Absperrschieber nach DIN EN1171

weichdichtend - freies Wellenende - F5 - PN10, PN16
aus Gusseisen mit Kugelgraphit nach EN-GJS-400-15

Type 01: Gate Valve acc. DIN EN1171

resiliet seated - Bare Shaft - F5 - PN10, PN16
of ductile cast iron acc. to EN-GJS-400-15

DN 50 - DN 600

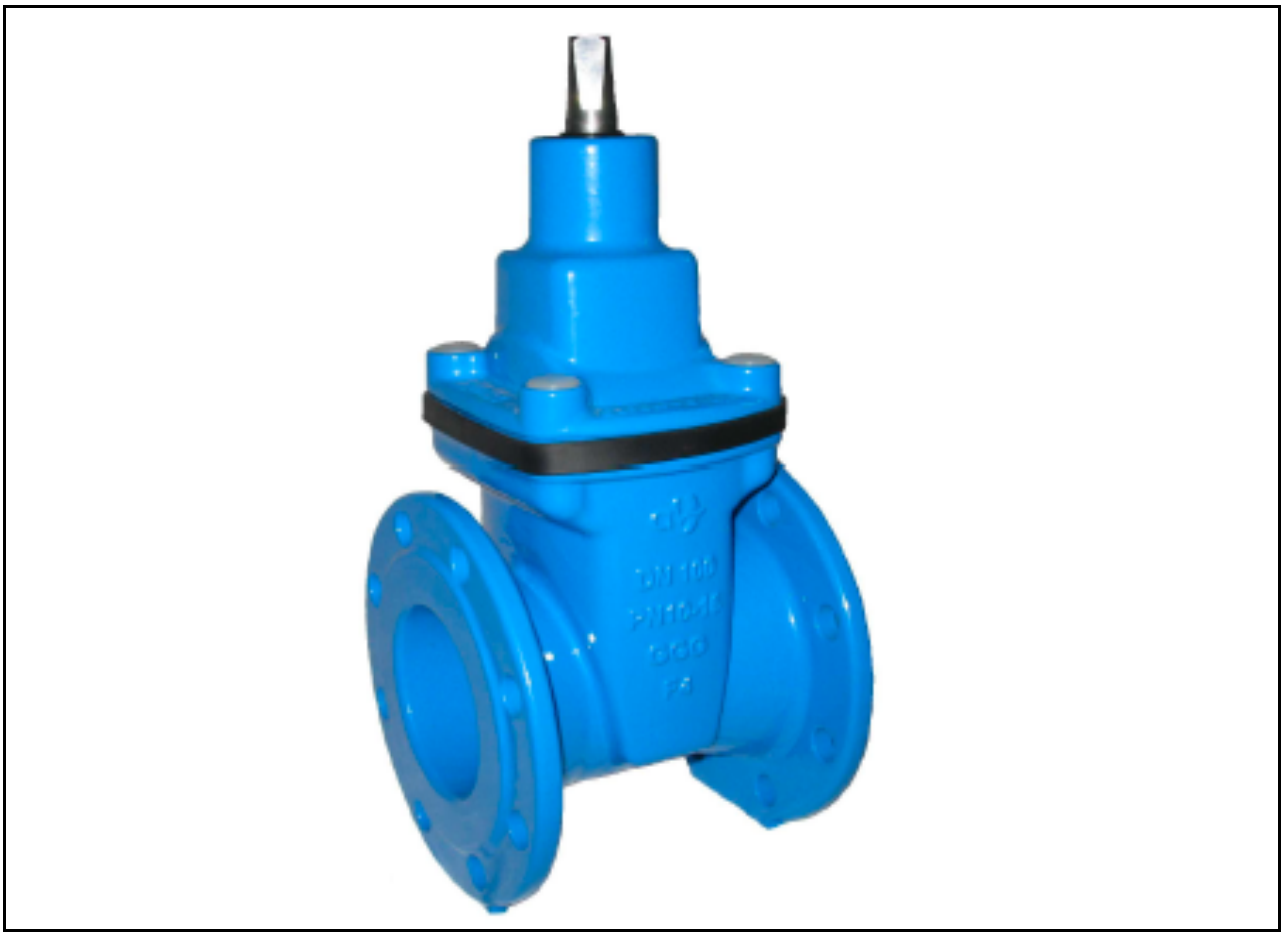

CTV Armaturen & Penstocks GmbH, Pliniusstrasse 6, 48488 Emsbüren, Deutschland
Tel: +49 (0)5903 217 6866, Email: info@ctv-valves.com

Absperrschieber
Gate Valve

CTV Armaturen & Penstocks GmbH

Verwendungsbereich: Wasser Range of application: Potable water				
Nennweite Size DN	Nenndruck Pressure rating PN	Wasser-Prüfdruck in bar Hydrost. test pressure in bar Gehäuse / Body	Sitz / Seat	Zulässiger Betriebsdruck in bar Admissible working pressure in bar bis 70°C / up to 70°C
50 - 600	10. - 16	15 - 24	11. - 17,6	10. - 16

Im Auftragsfall bitte Betriebsverhältnisse angeben.
In case of order please specify the working conditions

Werkstoffe / Zubehör, Materials / Equipment		
Katalog-Nr. / Catalogue No.		**01-BareShaft-F5-0004**
Gehäuse	Body	GGG (EN-GJS-400-15)
Haube	bonnet	GGG (EN-GJS-400-15)
Keil	wedge	GGG (EN-GJS-400-15)
Keilgummierung	wedge rubber	EPDM oder NBR / EPDM or NBR
Spindel	stem	1.4021 / 1.4571
Spindelmutter	stem nut	Bronze / Bronze
*Epoxid-Pulverbeschichtung, blau / epoxy powder coating, blue (Min 250 µm) andere Materialien auf Anfrage / other materials on request		

Nenn-weite Size	Baulänge nach Face to face length acc. to DIN EN 558-1 Series 14	Flansch Flange Ø		Maße Dimensions				Gewicht Weight	
DN mm	L mm	D mm		H_1 mm		H_2 mm	V mm	~ kg	
		PN10	PN16	PN10	PN16			PN10	PN16
50	250	165	165	83	83	214	14	10,1	10,1
65	270	185	185	93	93	258	17	14,3	14,3
80	280	200	200	100	100	284	17	16,7	16,7
100	300	220	220	110	110	320	19	23,2	23,2
125	325	250	250	125	125	387	19	30,1	30,1
150	350	285	285	143	143	426	19	37,5	37,5
200	400	340	340	170	170	531	24	67	67
250	450	395	405	198	203	634	27	136	137
300	500	445	460	223	230	742	27	145	147
350	550	505	520	253	260	827	27	184	184
400	600	565	580	283	290	953	32	226	226
450	650	615	640	308	308	1032	36	329	301
500	700	670	715	225	357	1153	36	349	353
600	800	780	840	390	420	1291	36	508	512

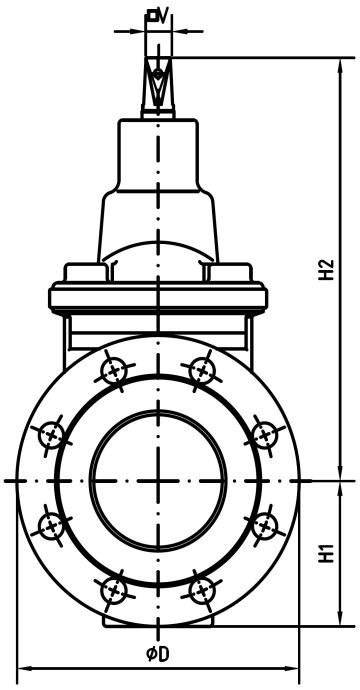

Technische Änderungen vorbehalten
We reserve the right to make technical modifications

17.05.2022 - 01-BareShaft-F5-004

CTV Armaturen & Penstocks GmbH, Pliniusstrasse 6, 48488 Emsbüren, Deutschland
Tel: +49 (0)5903 217 6866, Email: info@ctv-valves.com

CTV Armaturen & Penstocks GmbH

Modell 01: Absperrschieber nach DIN EN1171

weichdichtend - IsoTop Flansch - F5 - PN10, PN16
aus Gusseisen mit Kugelgraphit nach EN-GJS-400-15

Type 01: Gate Valve acc. DIN EN1171

resiliet seated - mounting flange - F5 - PN10, PN16
of ductile cast iron acc. to EN-GJS-400-15

DN 50 - DN 600

Absperrschieber
Gate Valve

CTV Armaturen & Penstocks GmbH

Verwendungsbereich: Wasser Range of application: Potable water				
Nennweite Size DN	Nenndruck Pressure rating PN	Wasser-Prüfdruck in bar Hydrost. test pressure in bar Gehäuse / Body	Sitz / Seat	Zulässiger Betriebsdruck in bar Admissible working pressure in bar bis 70°C / up to 70°C
50 - 600	10. - 16	15 - 24	11. - 17,6	10. - 16

Im Auftragsfall bitte Betriebsverhältnisse angeben.
In case of order please specify the working conditions

Werkstoffe / Zubehör, Materials / Equipment		
Katalog-Nr. / Catalogue No.		**01-ISOTop-F5-0005**
Gehäuse	Body	GGG (EN-GJS-400-15)
Haube	bonnet	GGG (EN-GJS-400-15)
Keil	wedge	GGG (EN-GJS-400-15)
Keilgummierung	wedge rubber	EPDM oder NBR / EPDM or NBR
Spindel	stem	1.4021 / 1.4571
Spindelmutter	stem nut	Bronze / Bronze
*Epoxid-Pulverbeschichtung, blau / epoxy powder coating, blue (Min 250 µm) andere Materialien auf Anfrage / other materials on request		

Nenn-weite Size	Baulänge nach Face to face length acc. to DIN EN 558-1 Series 14	Flansch Flange Ø		Maße Dimensions				Gewicht Weight		Volumen Volume
DN mm	L mm	D mm PN10	PN16	H_1 mm	H_2 mm	h mm	W mm	~ kg PN10	PN16	~ m³
50	250	165	165	83	180	45	16	11,1	11,1	0,0123
65	270	185	185	93	211	45	20	15,3	15,3	0,0175
80	280	200	200	100	237	45	20	17,7	17,7	0,0215
100	300	220	220	110	280	45	20	24,2	24,2	0,0284
125	325	250	250	125	332	45	20	31,1	31,1	0,0416
150	350	285	285	143	371	45	20	39,5	39,5	0,0568
200	400	340	340	174	474	45	20	69	69	0,0953
250	450	395	405	203	570	60	30	138	140	0,1525
300	500	445	460	230	668	60	30	147	149	0,2236
350	550	505	520	260	753	60	30	186	186	0,3109
400	600	565	580	290	860	60	30	228	228	0,4329
450	650	615	640	320	1062	60	30	301	303	0,5624
500	700	670	715	357	1062	60	30	351	355	0,7563
600	800	780	840	420	1231	60	30	510	515	1,1498

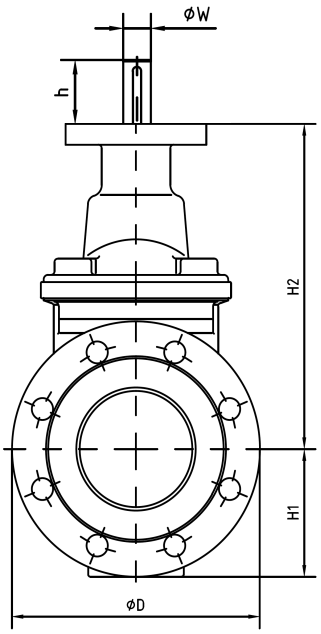

Technische Änderungen vorbehalten
We reserve the right to make technical modifications

17.05.2022-01-ISOTop-F5-0005

CTV Armaturen & Penstocks GmbH, Pliniusstrasse 6, 48488 Emsbüren, Deutschland
Tel: +49 (0)5903 217 6866, Email: info@ctv-valves.com

WRAS APPROVED PRODUCT · DIN DVGW CERT · ISO 9001:2015 · ISO 3834

Modell 01: Absperrschieber nach DIN EN 1171

CTV Armaturen & Penstocks GmbH

weichdichtend - F4
Baulänge nach DIN EN 558-1 Reihe 14
PN25 aus Gusseisen mit Kugelgraphit GGG

Type 01: Gate Valve acc. to EN DIN 1171

Resilient seated - F4
face to face length acc. to DIN EN 558-1 series 14
PN25 of ductile cast iron GGG

DN50 - DN300

CTV Armaturen & Penstocks GmbH, Pliniusstrasse 6, 48488 Emsbüren, Deutschland
Tel: +49 (0)5903 217 6866, Email: info@ctv-valves.com

ISO 9001:2015 ISO 3834

Absperrschieber
Gate Valve

CTV Armaturen & Penstocks GmbH

Verwendungsbereich: Abwasser und Trinkwasser. Alle Medienberührende Teile nach UBA-KTW und DVGW W270 Range of application: Sewage and Drinking Water. All contact parts according to UBA-KTW and DVGW W270				
Nennweite Size DN	Nenndruck Pressure rating PN	Wasser-Prüfdruck in bar Hydrost. test pressure in bar Gehäuse / Body	 Sitz / Seat	Zulässiger Betriebsdruck in bar Admissible working pressure in bar bis 80°C / up to 80°C
50 - 300	25	37,5	27,5	25

Im Auftragsfall bitte Betriebsverhältnisse angeben.
In case of order please specify the working conditions

Werkstoffe / Zubehör, Materials / Equipment		
Katalog-Nr. / Catalogue No.		**01-PN10-PN16-DN700-1200-006**
Gehäuse	Body	GGG 50 / GGG 50
Scheibe	Disc	GGG 50 + EPDM oder NBR/ GGG 50 + EPDM or NBR
Spindel	Stem	Edelstahl SS-316 / Stainless Steel SS-316
Dichtung	Gasket	EPDM oder NBR/ EPDM or NBR
Ventilhaube	Bonnet	GGG 50 / GGG 50
Stopfbuchse	Gland	Edelstahl SS-420 / Stainless Steel SS-420

Nenn-weite Size	Baulänge nach Face to face length acc. to DIN EN 558-1 Series 14	Maße Dimmensions						
DN mm	L mm F4	D mm PN25	f mm PN25	s mm PN25	b mm PN25	c mm PN25	n-d mm PN25	H mm PN25
50	150	165	125	99	3	19	4-19	216
65	170	185	145	118	3	19	8-19	260
80	180	200	160	132	3	19	8-19	286
100	190	235	190	156	3	19	8-23	325
125	200	270	220	184	3	19	8-28	3389
150	210	300	250	211	3	20	8-28	428
200	230	360	310	274	3	22	12-28	532
250	250	425	370	330	3	24,5	12-31	636
300	270	485	430	389	4	27,5	16-31	744

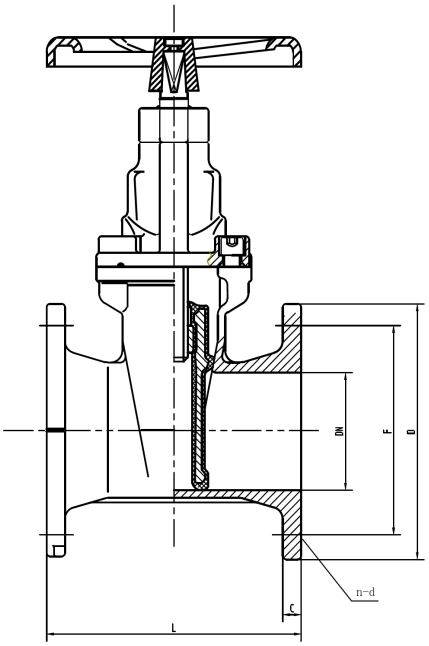

Technische Änderungen vorbehalten
We reserve the right to make technical modifications

13.07.2022 - 01-PN25-DN50-300-006

CTV Armaturen & Penstocks GmbH, Pliniusstrasse 6, 48488 Emsbüren, Deutschland
Tel: +49 (0)5903 217 6866, Email: info@ctv-valves.com

CTV Armaturen & Penstocks GmbH

Modell 02: Schieber nach EN1074-2

metallisch dichtend, F4 - PN10, PN16 Baulänge nach DIN EN 558-1
aus Gusseisen mit Kugelgraphit GGG

Type 02: Gate Valve acc. to EN1074-2

metal seated, F4 - PN10, PN16
face to face length acc. to DIN EN 558-1
of ductile cast iron GGG

DN 50 - DN 300

CTV Armaturen & Penstocks GmbH, Pliniusstrasse 6, 48488 Emsbüren, Deutschland
Tel: +49 (0)5903 217 6866, Email: info@ctv-valves.com

CTV Armaturen & Penstocks GmbH

Schieber metallisch dichtend nach EN1074-2

Gate Valve metal seated acc. to EN1074-2

Verwendungsbereich: Abwasser und Trinkwasser. Alle Medienberührende Teile nach UBA-KTW und DVGW W270				
Range of application: Sewage and Drinking Water. All contact parts according to UBA-KTW and DVGW W270				
Nennweite	Nenndruck	Wasser-Prüfdruck in bar		Zulässiger Betriebsdruck in bar
Size	Pressure rating	Hydrost. test pressure in bar		Admissible working pressure in bar
DN	PN	Gehäuse / Body	Sitz / Seat	bis 80°C / up to 80°C 1)
50 - 300	10, 16	24	17.6	10, 16

Im Auftragsfall bitte Betriebsverhältnisse angeb 1) Andere Betriebstemperaturen auf Anfrage möglich

In case of order please specify the working conditic Other working temperatures possible on request

Werkstoffe / Zubehör, Materials / Equipment		
Katalog-Nr. / Catalogue No.		**02-F4-0001**
Gehäuse	Body	GGG 50 / GGG 50
Abdeckung	Disc	GGG 50 / GGG 50
Dichtungsring	Seal ring	Edelstahl V2A-SS-304 / Stainless Steel A2-SS304
Ventilsitz	Valve seat	Edelstahl V2A-SS-304 / Stainless Steel A2-SS304
Muttern	Nut	Brass / Messing
Spindel	Stem	2CR13
Dichtung	Gasket	EPDM oder NBR / EPDM or NBR
Gummidichtung	rubber gasket	EPDM oder NBR / EPDM or NBR
o-ring	o-ring	EPDM oder NBR / EPDM or NBR
Kupferbuchse	copper bush	Brass / Messing
Staubring	Dust ring	EPDM oder NBR / EPDM or NBR
Ventildeckel	Bonnet	GGG 50 / GGG 50
Stopfbuchse	Gland	GGG 50 / GGG 50
Handrad	Handwheel	GGG 50 / GGG 50
Schraube	bolt	Edelstahl V2A-SS-304 / Stainless Steel A2-SS304
Beschichtung	Coating	EKB RAL 5015 min 250 µm nach DVGW W-270 / Epoxy Coating RAL 5015 min 250 µm

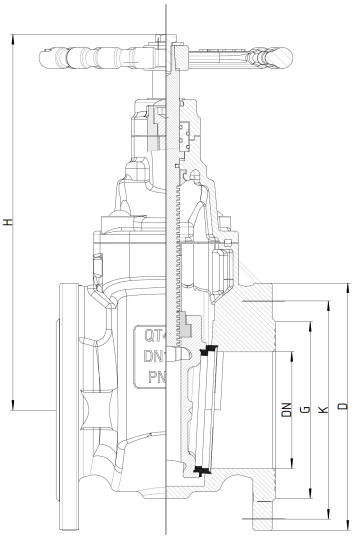

Nenn-weite Size	Baulänge face to face	Maße Dimensions								Vierkant-maß Square	Spindel-maß Stem
DN	L	D		K		G		nxØd		Sq	Sq
mm	mm	PN10	PN16	PN10	PN16	PN10	PN16	PN10	PN16	mm	mm
50	150	165	165	125	125	102	102	4 - Ø19	4 - Ø19	14	18
65	170	185	185	145	145	122	122	4 - Ø19	4 - Ø19	14	18
80	180	200	200	160	160	138	138	8 - Ø19	8 - Ø19	14	20
100	190	220	220	180	180	158	158	8 - Ø19	8 - Ø19	14	24
125	200	250	250	210	210	188	188	8 - Ø19	8 - Ø19	19	28
150	210	285	285	240	240	212	212	8 - Ø23	8 - Ø23	19	28
200	230	340	340	295	295	268	268	8 - Ø23	12 - Ø23	19	32
250	250	405	405	350	355	320	320	12 - Ø23	12 - Ø28	24	36
300	270	460	460	400	410	370	378	12 - Ø23	12 - Ø28	24	38

Technische Änderungen vorbehalten; DN300 - DN600 auf Anfrage

We reserve the right to make technical modifications; DN300 - DN600 on request

13.07.2022 - 02-F4-0001

CTV Armaturen & Penstocks GmbH, Pliniusstrasse 6, 48488 Emsbüren, Deutschland
Tel: +49 (0)5903 217 6866, Email: info@ctv-valves.com

WRAS APPROVED PRODUCT
DIN DVGW CERT
ISO 9001:2015
ISO 3834

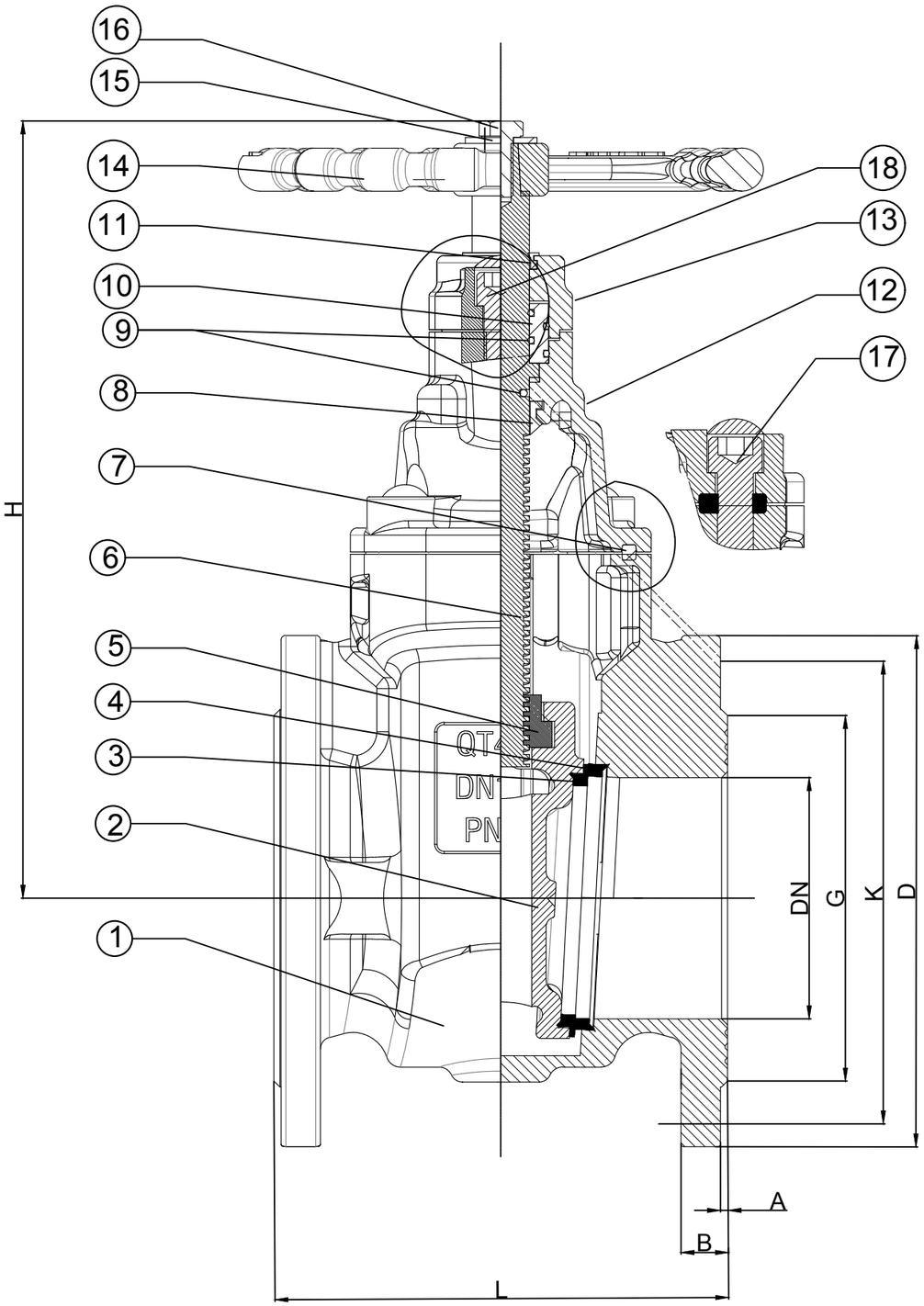

DN	L	D	K PN10	K PN16	G PN10	G PN16	A	B	C	H	n-d PN10	n-d PN16
50	150	165	125	125	102	102	3	19	200	245	4-19	4-19
65	170	185	145	145	122	122	3	19	200	268	4-19	4-19
80	180	200	160	160	138	138	3	19	220	290	8-19	8-19
100	190	220	180	180	158	158	3	19	250	315	8-19	8-19
125	200	250	210	210	188	188	3	19	280	370	8-19	8-19
150	210	285	240	240	212	212	3	19	280	410	8-23	8-23
200	230	340	295	295	268	268	3	20	320	495	8-23	12-23
250	250	405	350	355	320	320	3	22	350	628	12-23	12-28
300	270	460	400	410	370	378	4	25	450	680	12-23	12-28

Technical requirements / Technische Anforderungen

1. *Face to face length to* / Baulänge nach EN 588-1
2. *Flange to* / Flansch nach EN1092-2
3. *working temperature* / Betriebstemperatur: -20° - 80°C

18	*bolt*	Bolzen	DIN912
17	*bolt*	Bolzen	DIN912
16	*bolt*	Bolzen	SS304
15	*gasket*	Dichtung	SS304
14	*handwheel*	Handrad	GGG50
13	*gland*	Stopfbuchse	GGG50
12	*Bonnet*	Haube	GGG50
11	*Dust ring*	Staubschutzring	NBR
10	*copper bush*	Kupferbuchse	Brass
9	*o-ring*	O-Ring	NBR
8	*rubber gasket*	Gummidichtung	EPDM
7	*Gasket*	Dichtung	EPDM
6	*Stem*	Spindel	2CR13
5	*Nut*	Mutter	Brass
4	*Valve seat*	Ventilsitz	SS304
3	*Seal ring*	Dichtungsring	SS304
2	*Disc*	Scheibe	GGG50
1	*Body*	Gehäuse	GGG50
S.N.	*name /*	Bezeichnung	material

Nr/no	Name	Tag/day	Änderung/revision
01			

CTV Armaturen & Penstocks GmbH

Pliniusstraße 6, 48488 Emsbueren

Werkstoff	see BOOM	
	Name	Tag/day
Gezeichnet/drawn	Alina Arndt	25.04.2022
Geprüft/Checked By	Nabeel kekheya	

Baulängen n. DIN EN 558/
face-to-face dim. acc. to DIN EN 558

(Änderungen vorbehalten
Subject to change)

Maßstab
Scale
./.

Gate Valve metal seated
Schieber metallisch dichtend
F4 - PN10, PN16

drawing number:
02C-F4-PN10-PN16

Format/size DIN A3

Modell 02: Schieber nach EN1074-2

metallisch dichtend - mit Handrad - F5 - PN 10, PN16
Baulänge nach DIN EN 558-1
aus Gusseisen mit Kugelgraphit nach EN-GJS-400-15

CTV Armaturen & Penstocks GmbH

Type 02: Gate Valve acc. to EN1074-2

metal seated - with Handwheel - F5 - PN10, PN16
face to face length acc. to DIN EN 558-1
of ductile cast iron acc. To EN-GJS-400-15

DN 50 - DN 300

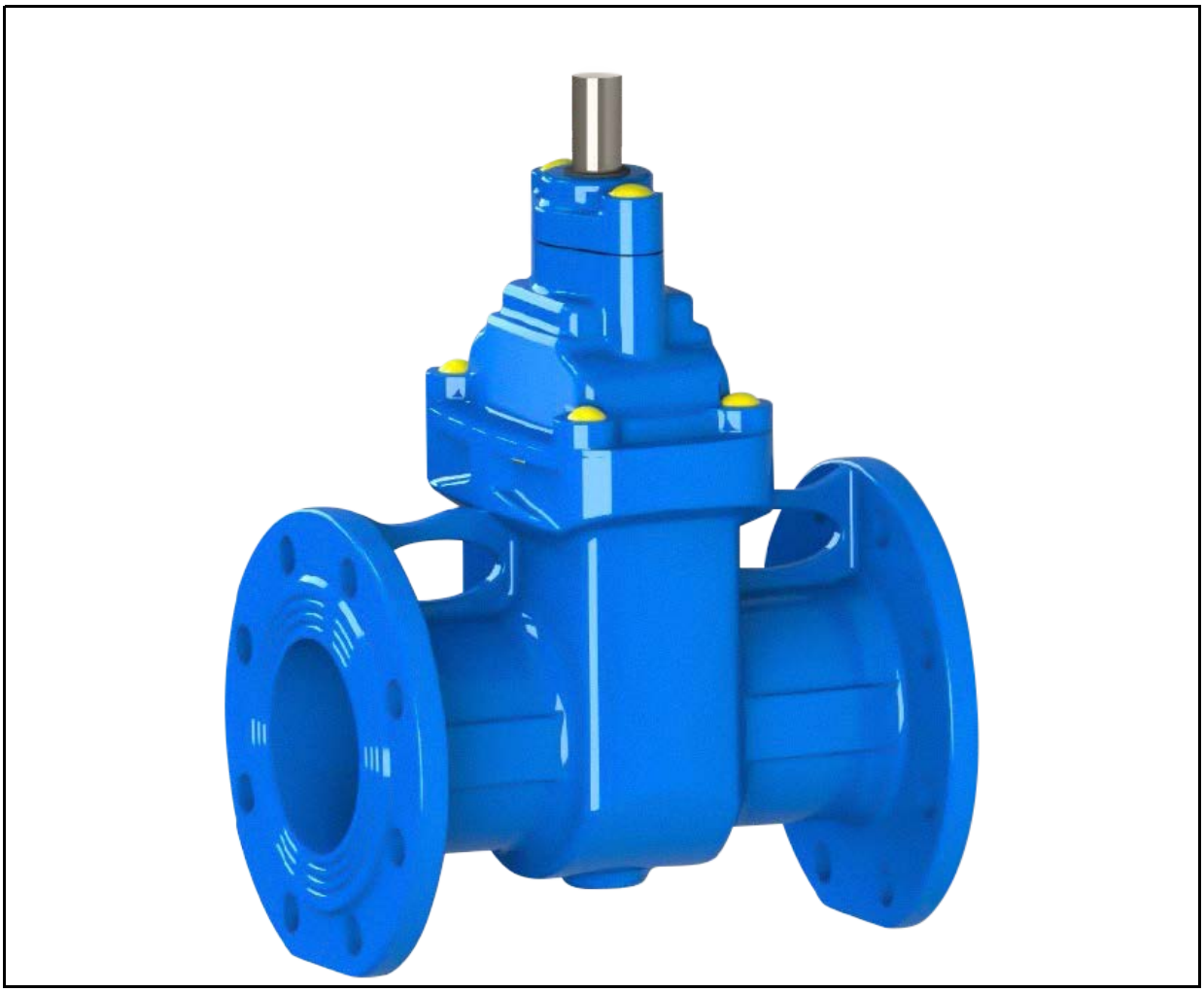

CTV Armaturen & Penstocks GmbH, Pliniusstrasse 6, 48488 Emsbüren, Deutschland
Tel: +49 (0)5903 217 6866, Email: info@ctv-valves.com

Schieber nach EN1074-2

Gate Valve acc. to EN1074-2

CTV Armaturen & Penstocks GmbH

Verwendungsbereich: Abwasser und Trinkwasser. Alle Medienberührende Teile nach UBA-KTW und DVGW W270				
Range of application: Sewage and Drinking Water. All contact parts according to UBA-KTW and DVGW W270				
Nennweite	Nenndruck	Wasser-Prüfdruck in bar		Zulässiger Betriebsdruck in bar
Size	Pressure rating	Hydrost. test pressure in bar		Admissible working pressure in bar
DN	PN	Gehäuse / Body	Sitz / Seat	bis 80°C / up to 80°C 1)
50 - 300	10, 16	24	17.6	10, 16

Im Auftragsfall bitte Betriebsverhältnisse angeben. 1) Andere Betriebstemperaturen auf Anfrage möglich

In case of order please specify the working conditio Other working temperatures possible on request

Werkstoffe / Zubehör, Materials / Equipment		
Katalog-Nr. / Catalogue No.		**02-F5-0002**
Gehäuse	Body	GGG 50 / GGG 50
Abdeckung	Disc	GGG 50 / GGG 50
Dichtungsring	Seal ring	Edelstahl V2A-SS-304 / Stainless Steel A2-SS304
Ventilsitz	Valve seat	Edelstahl V2A-SS-304 / Stainless Steel A2-SS304
Muttern	Nut	Brass / Messing
Spindel	Stem	2CR13
Dichtung	Gasket	EPDM oder NBR / EPDM or NBR
Gummidichtung	rubber gasket	EPDM oder NBR / EPDM or NBR
o-ring	o-ring	EPDM oder NBR / EPDM or NBR
Kupferbuchse	copper bush	Brass / Messing
Staubring	Dust ring	EPDM oder NBR / EPDM or NBR
Ventildeckel	Bonnet	GGG 50 / GGG 50
Stopfbuchse	Gland	GGG 50 / GGG 50
Handrad	Handwheel	GGG 50 / GGG 50
Schraube	bolt	Edelstahl V2A-SS-304 / Stainless Steel A2-SS304
Beschichtung	Coating	EKB RAL 5015 min 250 µm nach DVGW W-270 / Epoxy Coating RAL 5015 min 250 µm

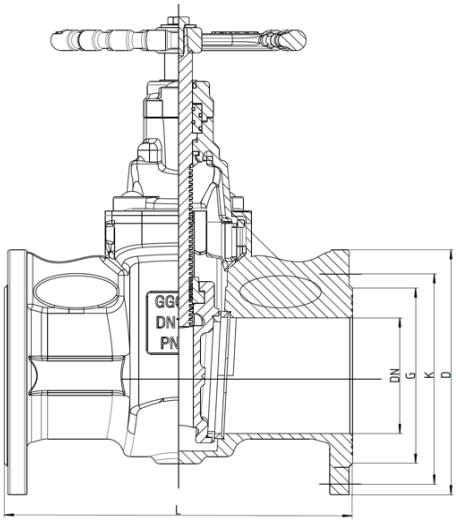

Nenn-weite Size	Baulänge face	Maße Dimmensions								Vierkant-maß Square	Spindel-maß Stem
DN	L	D		K		G		nxØd		Sq	Sq
mm	mm	PN10	PN16	PN10	PN16	PN10	PN16	PN10	PN16	mm	mm
50	250	165	165	125	125	102	102	4 - Ø19	4 - Ø19	14	18
65	270	185	185	145	145	122	122	4 - Ø19	4 - Ø19	14	18
80	280	200	200	160	160	138	138	8 - Ø19	8 - Ø19	14	20
100	300	220	220	180	180	158	158	8 - Ø19	8 - Ø19	14	24
125	325	250	250	210	210	188	188	8 - Ø19	8 - Ø19	19	28
150	350	285	285	240	240	212	212	8 - Ø23	8 - Ø23	19	28
200	400	340	340	295	295	268	268	8 - Ø23	12 - Ø23	19	32
250	450	405	405	350	355	320	320	12 - Ø23	12 - Ø28	24	36
300	500	460	460	400	410	370	378	12 - Ø23	12 - Ø28	24	38

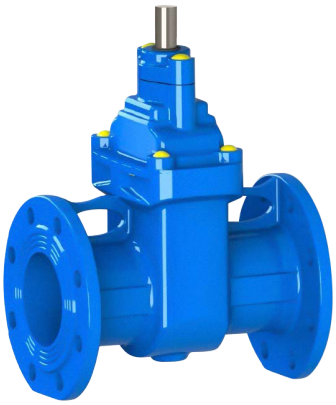

Technische Änderungen vorbehalten; DN300 - DN600 auf Anfrage

We reserve the right to make technical modifications; DN300 - DN600 on request

15.07.2022 - 02-F5-0002

CTV Armaturen & Penstocks GmbH, Pliniusstrasse 6, 48488 Emsbüren, Deutschland
Tel: +49 (0)5903 217 6866, Email: info@ctv-valves.com

WRAS APPROVED PRODUCT
DIN DVGW CERT
ISO 9001:2015
ISO 3834

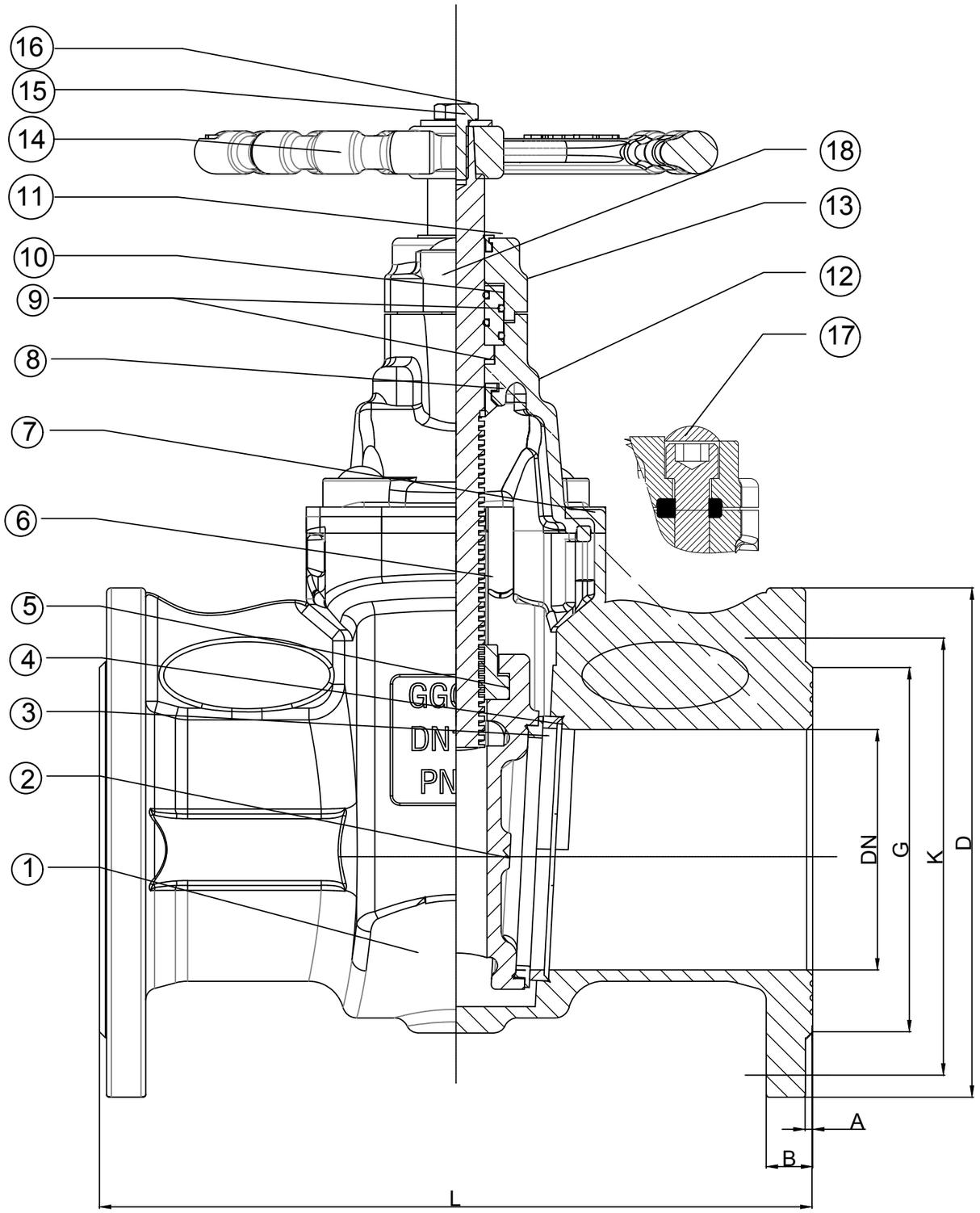

DN	L	D	K PN10	K PN16	G PN10	G PN16	A	B	C	H	n-d PN10	n-d PN16
50	250	165	125	125	102	102	3	19	200	245	4-19	4-19
65	270	185	145	145	122	122	3	19	200	268	4-19	4-19
80	280	200	160	160	138	138	3	19	220	290	8-19	8-19
100	300	220	180	180	158	158	3	19	250	315	8-19	8-19
125	325	250	210	210	188	188	3	19	280	370	8-19	8-19
150	350	285	240	240	212	212	3	19	280	410	8-23	8-23
200	400	340	295	295	268	268	3	20	320	495	8-23	12-23
250	450	405	350	355	320	320	3	22	350	628	12-23	12-28
300	500	460	400	410	370	378	4	25	450	680	12-23	12-28

Technical requirements / Technische Anforderungen

1. *Face to face length to* / Baulänge nach EN 588-1
2. *Flange to* / Flansch nach EN1092-2
3. *working temperature* / Betriebstemperatur: -20° - 80°C

S.N.	*name /*	Bezeichnung	material
18	*bolt*	Bolzen	DIN912
17	*bolt*	Bolzen	DIN912
16	*bolt*	Bolzen	SS304
15	*gasket*	Dichtung	SS304
14	*handwheel*	Handrad	GGG50
13	*gland*	Stopfbuchse	GGG50
12	*Bonnet*	Haube	GGG50
11	*Dust ring*	Staubschutzring	NBR
10	*copper bush*	Kupferbuchse	Brass
9	*o-ring*	O-Ring	NBR
8	*rubber gasket*	Gummidichtung	EPDM
7	*Gasket*	Dichtung	EPDM
6	*Stem*	Spindel	2CR13
5	*Nut*	Mutter	Brass
4	*Valve seat*	Ventilsitz	SS304
3	*Seal ring*	Dichtungsring	SS304
2	*Disc*	Scheibe	GGG50
1	*Body*	Gehäuse	GGG50

Nr/no	Name	Tag/day	Änderung/revision
01			

CTV Armaturen & Penstocks GmbH

Pliniusstraße 6, 48488 Emsbueren

Werkstoff	see BOOM	
	Name	Tag/day
Gezeichnet/drawn	Alina Arndt	22.04.2022
Geprüft/Checked By	Nabeel kekheya	

Baulängen n. DIN EN 558/
face-to-face dim. acc. to DIN EN 558

(Änderungen vorbehalten
Subject to change)

Maßstab
Scale
./.

Gate Valve metal seated
Schieber metallisch dichtend
F5 - PN10, PN16

drawing number:
02C-F5-PN10, PN16

Format/size DIN A3

Modell 02: Schieber nach EN1074-2

metallisch dichtend - mit Handrad - F5 - PN25
Baulänge nach DIN EN 558-1
aus Gusseisen mit Kugelgraphit nach EN-GJS-400-15

CTV Armaturen & Penstocks GmbH

Type 02: Gate Valve acc. to EN1074-2

metal seated - with Handwheel - F5 - PN25
face to face length acc. to DIN EN 558-1
of ductile cast iron acc. to EN-GJS-400-15

DN 50 - DN 300

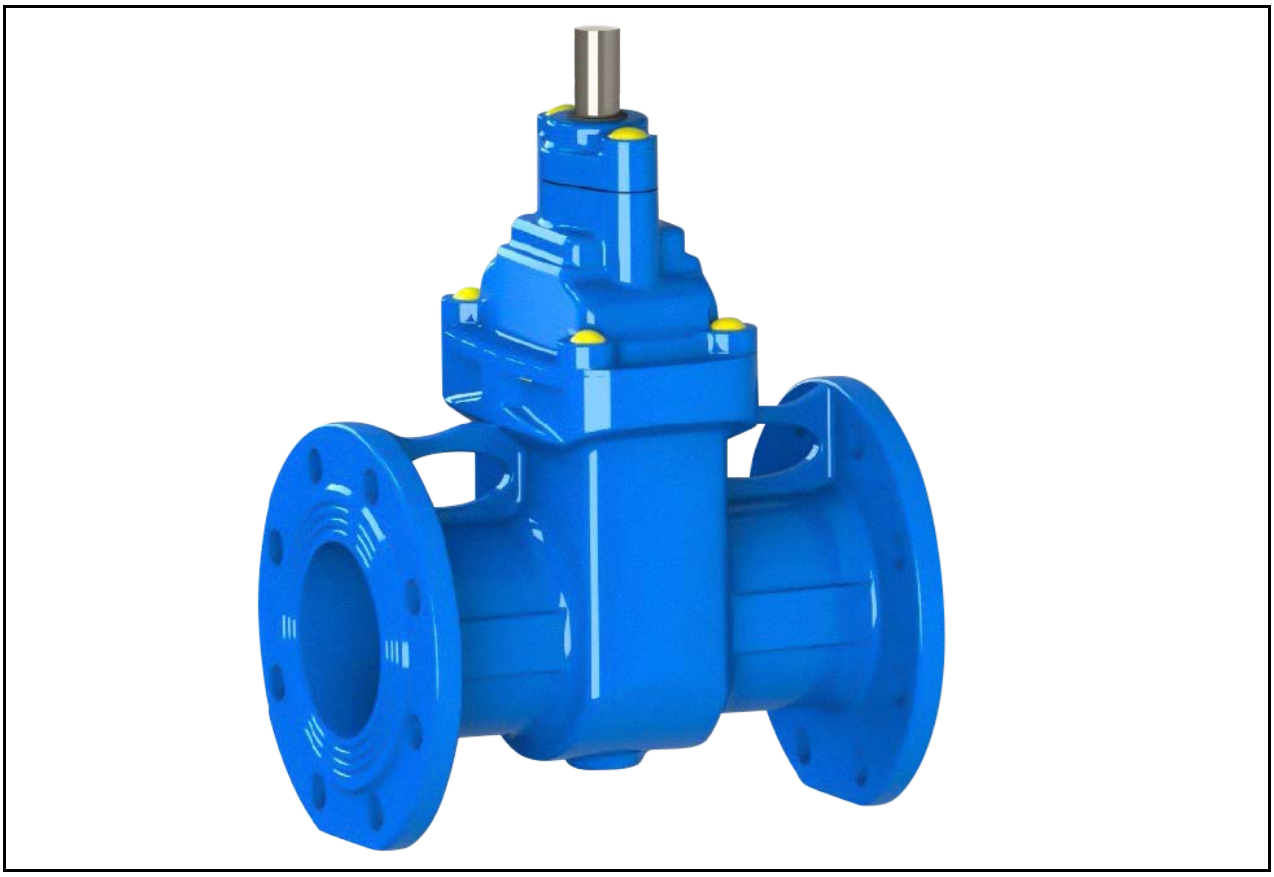

CTV Armaturen & Penstocks GmbH, Pliniusstrasse 6, 48488 Emsbüren, Deutschland
Tel: +49 (0)5903 217 6866, Email: info@ctv-valves.com

Schieber nach EN1074-2

Gate Valve acc. to EN1074-2

CTV Armaturen & Penstocks GmbH

Verwendungsbereich: Abwasser und Trinkwasser. Alle Medienberührende Teile nach UBA-KTW und DVGW W27				
Range of application: Sewage and Drinking Water. All contact parts according to UBA-KTW and DVGW W270				
Nennweite	Nenndruck	Wasser-Prüfdruck in bar		Zulässiger Betriebsdruck in bar
Size	Pressure rating	Hydrost. test pressure in bar		Admissible working pressure in bar
DN	PN	Gehäuse / Body	Sitz / Seat	bis 80°C / up to 80°C 1)
50-300	25	37,5	27,5	25

Im Auftragsfall bitte Betriebsverhältnisse angeb 1) Andere Betriebstemperaturen auf Anfrage möglich

In case of order please specify the working conditic Other working temperatures possible on request

Werkstoffe / Zubehör, Materials / Equipment		
Katalog-Nr. / Catalogue No.		**02-F5-PN25-0003**
Gehäuse	Body	GGG 50 / GGG 50
Abdeckung	Disc	GGG 50 / GGG 50
Dichtungsring	Seal ring	Edelstahl V2A-SS-304 / Stainless Steel A2-SS304
Ventilsitz	Valve seat	Edelstahl V2A-SS-304 / Stainless Steel A2-SS304
Muttern	Nut	Brass / Messing
Spindel	Stem	2CR13
Dichtung	Gasket	EPDM oder NBR / EPDM or NBR
Gummidichtung	rubber gasket	EPDM oder NBR / EPDM or NBR
o-ring	o-ring	EPDM oder NBR / EPDM or NBR
Kupferbuchse	copper bush	Brass / Messing
Staubring	Dust ring	EPDM oder NBR / EPDM or NBR
Ventildeckel	Bonnet	GGG 50 / GGG 50
Stopfbuchse	Gland	GGG 50 / GGG 50
Handrad	Handwheel	GGG 50 / GGG 50
Schraube	bolt	Edelstahl V2A-SS-304 / Stainless Steel A2-SS304
Beschichtung	Coating	Epoxy Coating RAL 5015 min 250 µm

Nenn-weite Size	Baulänge face to face	Maße Dimmensions				Vierkant-maß Square
DN	L	D	K	G	nxØd	Standard
mm	mm	PN25	PN25	PN25	PN25	PN25
50	250	165	125	102	4 - Ø19	14
100	300	235	190	160	8 - Ø23	19
150	350	300	250	212	8 - Ø28	19
200	400	360	310	276	12 - Ø28	24
250	450	450	385	345	12 - Ø34	27
300	500	515	450	409	16 - Ø34	27

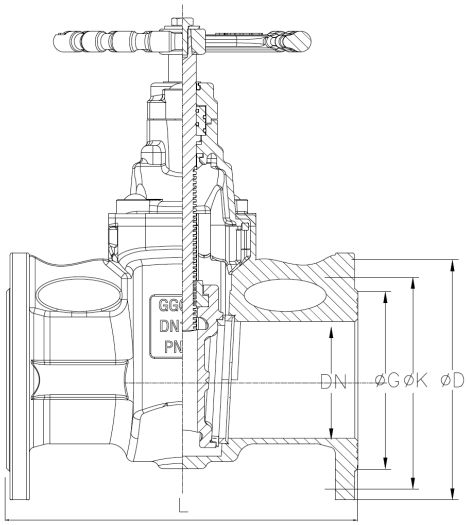

Technische Änderungen vorbehalten; bis Größe DN600 auf Anfrage

We reserve the right to make technical modifications; the sizes up to DN600 on request

22.12.2022 - 02-F5-PN25-0003

CTV Armaturen & Penstocks GmbH, Pliniusstrasse 6, 48488 Emsbüren, Deutschland
Tel: +49 (0)5903 217 6866, Email: info@ctv-valves.com

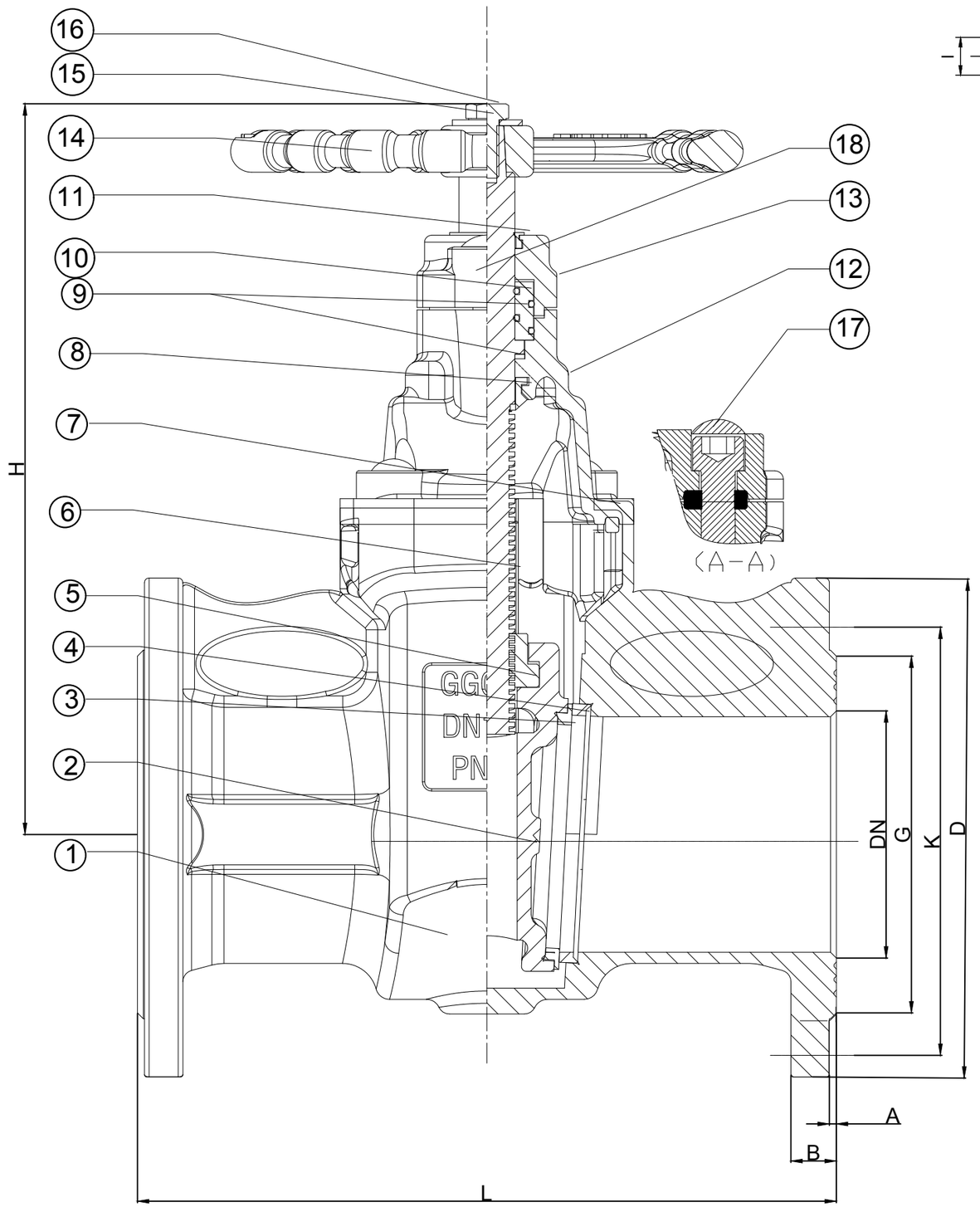

Detail stem

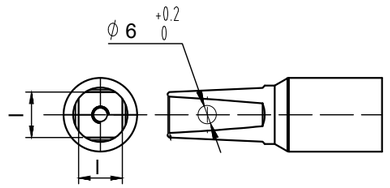

DN	L	D	K	G	A	B	C	H	n-d	l
50	250	165	125	102	3	19	200	245	4-19	14
100	300	235	190	160	3	19	250	315	8-23	19
150	350	300	225	212	3	20	280	410	8-28	19
200	400	360	310	276	3	22	320	495	12-28	24
250	450	450	385	345	3	34,5	350	628	12-34	27
300	500	515	450	409	4	39,5	450	680	16-34	27

Technical requirements / Technische Anforderungen

1. *Face to face length to* / Baulänge nach EN 588-1
2. *Flange to* / Flansch nach EN1092-2
3. *working temperature* / Betriebstemperatur: -20° - 80°C

18	*bolt*	Bolzen	SS304
17	*bolt*	Bolzen	SS304
16	*bolt*	Bolzen	SS304
15	*gasket*	Dichtung	SS304
14	*handwheel*	Handrad	GGG50
13	*gland*	Stopfbuchse	GGG50
12	*Bonnet*	Ventideckel	GGG50
11	*Dust ring*	Staubschutzring	NBR
10	*copper bush*	Kupferbuchse	Brass
9	*o-ring*	O-Ring	NBR
8	*rubber gasket*	Gummidichtung	EPDM
7	*Gasket*	Dichtung	EPDM
6	*Stem*	Spindel	2CR13
5	*Nut*	Mutter	Brass
4	*Valve seat*	Ventilsitz	SS304
3	*Seal ring*	Dichtungsring	SS304
2	*Disc*	Abdeckung	GGG50
1	*Body*	Gehäuse	GGG50
S.N.	*name /*	Bezeichnung	material

01			
Nr/no	Name	Tag/day	Änderung/revision

CTV Armaturen & Penstocks GmbH

Pliniusstraße 6, 48488 Emsbueren

Werkstoff	see BOOM	
	Name	Tag/day
Gezeichnet/drawn	Alina Arndt	25.04.2022
Geprüft/Checked By	Nabeel kekheya	

Baulängen n. DIN EN 558/
face-to-face dim. acc. to DIN EN 558

(Änderungen vorbehalten
Subject to change)

Maßstab
Scale
./.

Gate Valve metal seated
Schieber metallisch dichtend
F5 - PN25

drawing number:
02C-F5-PN25

Format/size DIN A3

Knife Gate Valves

05

Knife Gate Valves

PN10 (DN50 – DN300) | PN8 (DN350 – DN400) | PN6 (DN500 – DN600)
PN 2,5 (DN 700 - DN 1200)

Product features:

- Flange connection acc. to DIN EN 1092-2 PN10 (equivalent to DIN 2501 PN10)
- Face to face dimension acc. to DIN EN 558, basic series 20 (equivalent to DIN 3202-3 series K1)
- Sealing on both sides, with continuous interior pipe bottom, for mounting between flanges and suitable for end-of-line installation without additional counter-flange
- Continuous position indicator OPEN-CLOSED; with integrated lubricator, depending on version
- Integrated protection against accidental contact DN 50-300
- As from DN 350 with stud bolts, protection against accidental contact optional

Materials (basic version):

- Casted parts of ductile cast iron acc. to EN-GJS-400-15 (GGG-40)
- Plate material no.: 1.4301/A2 or 1.4401/A4
- Spindle material no.: 1.4301/A2 or 1.4401/A4
- Bolts and nuts: 1.4301/A2 or 1.4401/A4
- Enclosed sealing element made of elastomer (NBR)
- Surface protection inside and outside by means of fusion bonded epoxy powder coating blue, RAL 5015 (average dry film thickness >250µm)
- For liquids up to max. +70°C with max. operating and differential pressure of 10 bar
- Mounting brackets material no.: 1.4301

Other materials as well as accessories on request

Fields of application:

Raw water, energy and industrial management
e.g. for waste water technology for raw water, digested sludge, waste water and air

Chemical industry
e.g. for chemically polluted waste water, etc.

Food industry and breweries
e.g. for washing and rinsing plants, conveyor plants, etc.

Biogas plants
e.g. for sludges, waste water, etc.

Further possibilities of application on request

Drive options:

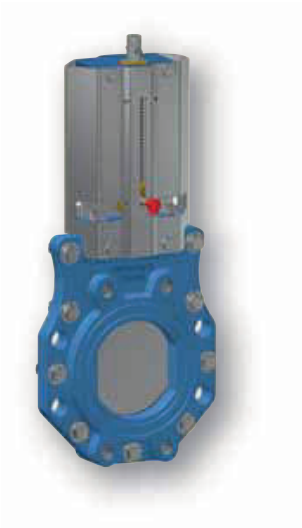

05-2002010/-08

Knife gate valve
with bare spindle end
for mounting of spindle extensions, square caps etc., with integrated position indicator
DN50 – DN600

05-2012010-08

Knife gate valve
with non-rising spindle and handwheel
with integrated position indicator
DN50 – DN600

05-2072002

Knife gate valve
with adjustable lever
Lever and slide rod made of stainless steel
DN50 – DN150

05-2132010/-08

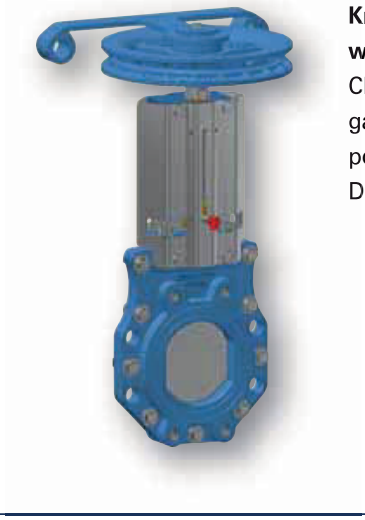

Knife gate valve
with chain wheel
Chain stainless steel or steel galvanized, with integrated position indicator
DN50 – DN600

Subject to technical changes as well as the use of equivalent or higher quality materials. All representations are not binding.

Drive options:

05-2442010-08

Knife gate valve
with control orifice
DN50 – DN600

Triangular control orifice

Pentangular control orifice

Basic version

05-2372010/-08/-06

Knife gate valve
with connecting flange
for mounting multi-turn On/Off and modulating electric actuators, as well as linear actuators
DN50 – DN600

05-2032010-08

Knife gate valve
with rising spindle
DN50 – DN800
Multi-turn electric actuator or modulating actuator

Subject to technical changes as well as the use of equivalent or higher quality materials. All representations are not binding.

Drive options:

Basic version

05-2372010/-08/-06

Knife gate valve
with connecting flange
for mounting multi-turn On/Off
and modulating electric actuators,
as well as linear actuators
DN50 – DN600

05-2152010/-08

Knife gate valve
with pneumatic actuators
double-acting or spring resetting
to customer specifications
DN50 – DN600

05-2052010-08

Knife gate valve
with hydraulic actuator
DN50 – DN600

Subject to technical changes
as well as the use of equivalent or
higher quality materials.
All representations are not binding.

CTV Armaturen & Penstocks GmbH

Knife gate valve
DN 700 - DN 1200

PN2,5
PN6
PN10

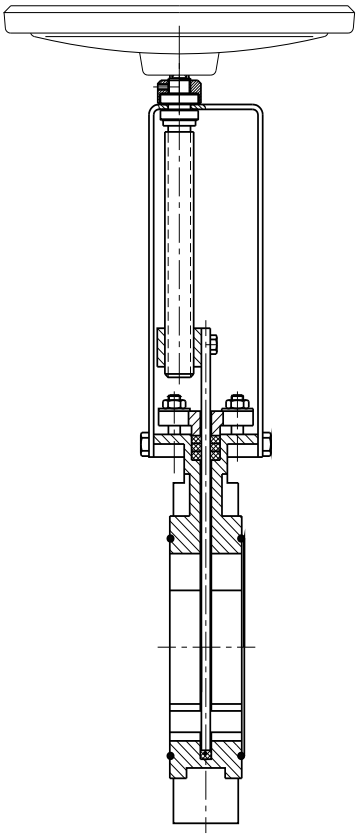

Product description (standard execution):

- Bidirectional tightness
- Knife circumferential seal profile with steel insert
- Knife cleaning scrapers
- Ductile cast iron monolithic body EN-GJS 400-15
- Stainless steel 1.4021 spindle with rolled thread
- Low friction spindle bearing by plastic and brass plain washers
- Gland sealing – o-ring NBR and non-asbestos cord
- Wedge nut made of forged brass
- Epoxy coating minimum 250 microns according to EN ISO 12944-5
- Stainless steel bolts and washers
- Product according to EN 1074-1 and 2; EN 1171
- Flange connection according to EN 1092-2 (DIN 2501) pressure PS2,5; PS6; PS10
- Face to face according to producer documentation
- Product marking according to EN 19; EN 1074

Application:

Water and sewage networks and tanks; pulverized products, transport of non agressive liquids.
Working conditions:
temp. up +70˚C
pressure up to 1,0 MPa

Execution variant:

With non-rising and rising spindle
With Intersecting axis gear
With deflector
With electric or pneumatic actuator - see: 2905
With inductive sensors

Test control:

Hydraulic test according to EN 1074-1; EN 1074-2; EN 12266-1
Seat: 1,1 xPN
Body: 1,5 x PN
Operation torque test.

Installation:

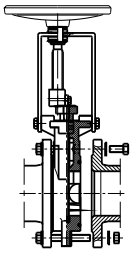

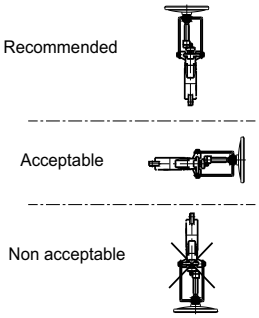

CTV Armaturen & Penstocks GmbH · Pliniusstraße 6 · D-48488 Emsbueren · Deutschland · Telefon +49 (0)5903 217 68 66
info@ctv-valves.com · www.ctv-valves.com

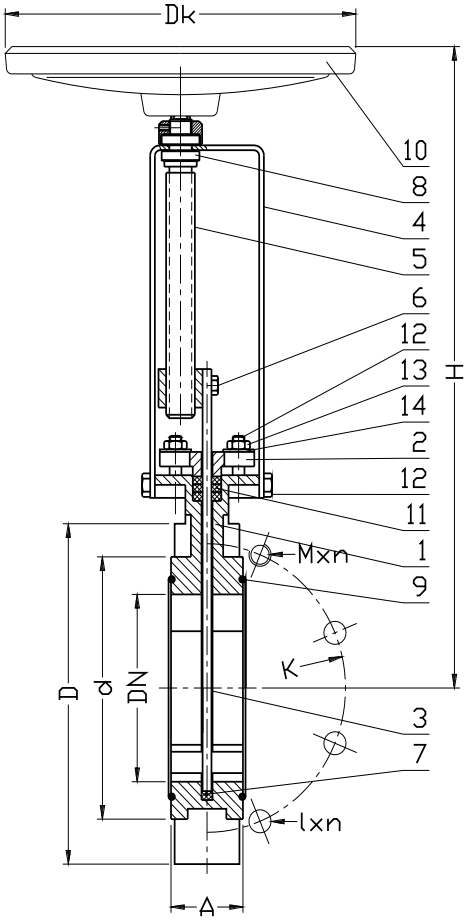

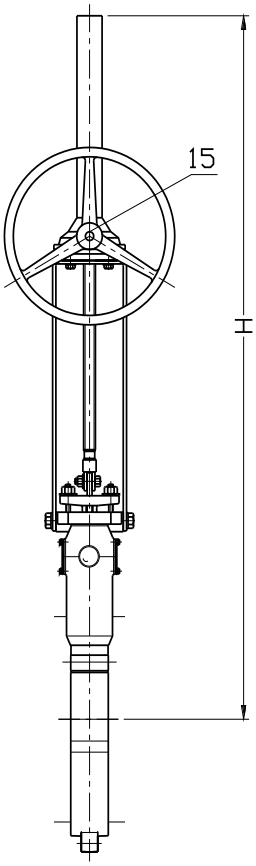

DN700-DN1000

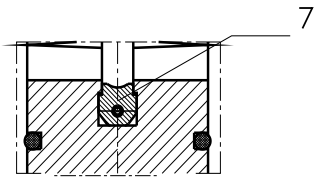

No.	Part	Standard execution
1	Body	Ductile cast iron EN-GJS-400-15 EN 1563
2	Clamping plate	Ductile cast iron EN-GJS-400-15 EN 1563
3	Knife	Stainless steel 1.4301 EN 10088-1
4	Pillar	Steel 1.0038 EN 10025-2
5	Spindle	Stainless steel 1.4021 EN 10088-1
6	Spindle nut	Brass EN 1982
7	Gasket	Rubber NBR EN ISO 1629
8	Sliding bushing	Polyamide EN 1871-1 Brass EN 1982
9	Seal o-ring	Rubber NBR EN ISO 1629
10	Handwheel	Grey iron EN-GJL-250 EN 1561
11	Gland seal	PACKAGE; Rubber NBR, EN ISO 1629 with non-asbestos cord
12	Screw	Stainless steel A2 EN ISO 4014
13	Nut	Stainless steel A4 EN ISO 4032
14	Washer	Stainless steel A2 EN ISO 7091
15	Gearbox	Producer catalogue

- other material variants on special request

DN700 to DN1000 - rising spindle + gearbox (Non Rising Spindle available on Request)

DN	PN	PS	K	D	d	l x n	M x n	A		H	Dk	Kv	Weight
								by drawing	row 20				
[mm]	[bar]						[mm]					[m³/h]	[kg]
700	10	2.5	840	910	794	Ø31x14	M27x10	-	165	2480	630	48500	554
800			950	1015	901	Ø34x14	M30x10	-	190	2800		58200	680
900			1050	1115	1001	Ø34x16	M30x12	-	203	3070	815	77600	850
1000			1160	1230	1112	Ø37x16	M33x12	-	216	3430		97000	1150

DN 1200 details are available upon request.

CTV Armaturen & Penstocks GmbH · Pliniusstraße 6 · D-48488 Emsbueren · Deutschland · Telefon +49 (0)5903 217 68 66
info@ctv-valves.com · www.ctv-valves.com

Modell 05: Plattenschieber mit Top-Flansch

Baulänge nach DIN EN 558-1 Reihe 20
PN 10 aus Gusseisen mit Kugelgraphit GGG

CTV Armaturen & Penstocks GmbH

Type 05: Knife gate valve with top flange

face to face length acc. to DIN EN 558-1 series 20
PN 10 of ductile cast iron GGG

DN 50 - DN 600

CTV Armaturen & Penstocks GmbH, Pliniusstrasse 6, 48488 Emsbüren, Deutschland
Tel: +49 (0)5903 217 6866, Email: info@ctv-valves.com

Plattenschieber mit Top-Flansch

Knife gate valve with top flange

CTV Armaturen & Penstocks GmbH

Verwendungsbereich: Wasser Range of application: Potable water				
Nennweite Size DN	Nenndruck Pressure rating PN	Wasser-Prüfdruck in bar Hydrost. test pressure in bar Gehäuse / Body	 Sitz / Seat	Zulässiger Betriebsdruck in bar Admissible working pressure in bar bis 70°C / up to 70°C
50 - 600	10	15	11	10

Im Auftragsfall bitte Betriebsverhältnisse angeben.

In case of order please specify the working conditions

Werkstoffe / Zubehör, Materials / Equipment		
Katalog-Nr. / Catalogue No.		**05-DN600-IsoTop-001**
Gehäuse	Body	GGG (EN-GJS-400-15)
Stütze	support	GGG (EN-GJS-400-15)
Seitenplatte	side plate	A2 Edelstahl / A2 Stainless Steel
Dichtung	gasket	EPDM oder NBR / EPDM or NBR
Spindel	stem	1.4057 / 1.4057
Spindelmutter	stem nut	Alubronze / Alubronze
*Epoxid-Pulverbeschichtung, blau / epoxy powder coating, blue (Min 250 µm) andere Materialien auf Anfrage / other materials on request		

DN	PN	L	E	H1	H2	M	k	b	dF	key	kg
mm		mm									
50	10	43	136	70	291	4 x M16	125	16	90	5x5x40	6,5
65	10	46	156	80	317	4 x M16	145				8
80	10	46	178	90	340	4 x M16	160				9,5
100	10	52	196	100	373	4 x M16	180				12
125	10	56	224	115	420	4 x M16	210				16
150	10	56	260	130	481.5	4 x M20	240	20	125	6x6x40	22
200	10	60	317	160	581	4 x M20	295				35
250	10	68	382	200	667	8 x M20	350				53
300	10	78	430	225	760	8 x M20	400				70
350	8	78	520	260	921	12 x M20	460				105
400	8	102	580	290	1036	12 x M24	515	30	175	8x7x50	157
500	6	127	715	360	1231	16 x M24	620				258
600	6	154	780	390	1426	16 x M24	725				319

Technische Änderungen vorbehalten

We reserve the right to make technical modifications

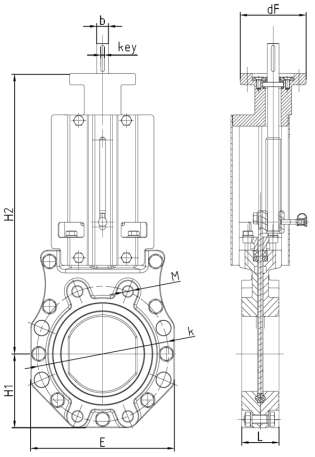

DN50 - DN300

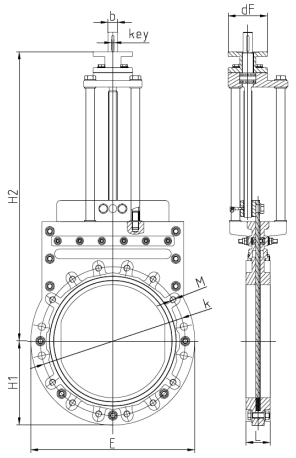

DN300 - DN600

14.07.2022 - 05-DN600-IsoTop-001

CTV Armaturen & Penstocks GmbH, Pliniusstrasse 6, 48488 Emsbüren, Deutschland
Tel: +49 (0)5903 217 6866, Email: info@ctv-valves.com

Check valves

06

CTV Armaturen & Penstocks GmbH

Modell 06-NCV: Rückschlagventil ohne Anschlag

aus Gusseisen mit Kugelgraphit GGG - PN10, PN16, PN25

Type 06-NCV: Non Slam Check Valve

of ductile cast iron GGG - PN10, PN16, PN25

DN50 - 1200

CTV Armaturen & Penstocks GmbH, Pliniusstrasse 6, 48488 Emsbüren, Deutschland
Tel: +49 (0)5903 217 6866, Email: info@ctv-valves.com

Rückschlagventil ohne Anschlag

Non Slam Check Valve

CTV Armaturen & Penstocks GmbH

Verwendungsbereich: sauberes Wasser Range of application: clean water				
Nennweite Size DN	Nenndruck Pressure rating PN	Wasser-Prüfdruck in bar Hydrost. test pressure in bar Gehäuse / Body	 Sitz / Seat	Zulässiger Betriebsdruck in bar Admissible working pressure in bar bis 80°C / up to 80°C
50 - 1200	10, 16, 25	15, 24, 37.5	11, 17.6, 27.5	10, 16, 25

Im Auftragsfall bitte Betriebsverhältnisse angeben.

In case of order please specify the working conditions

Werkstoffe / Zubehör, Materials / Equipment		
Katalog-Nr. / Catalogue No.		**06-NCV-0001**
Gehäuse	Body	Gusseisen mit Kugelgraphit / Ductile Iron (GJS 500-7)
Scheibe	Disc	Gusseisen mit Kugelgraphit + Gummi / Ductile Iron + rubber
Feder	Spring	Edelstahl / Stainless Steel (AISI 304 / 316)
Spindel	Stem	Edelstahl / Stainless Steel (AISI 304 / 420)
Unterlegscheibe	Washer	Gummi oder Plastik / rubber or plastic (EPDM / Nylon)
Mutter	Nut	Edelstahl / Stainless Steel (AISI 304)
Buchse	Bushing	Bronze / Bronze
Diffusor	Diffuser	Gusseisen mit Kugelgraphit / Ductile Iron (GJS 500-7)
Stellschraube	Set Screw	Edelstahl / Stainless Steel (AISI 304)

Nenn-Size	Maße Dimmensions									
DN	L	D			K			n-d		
mm	(F/F)	PN10	PN16	PN25	PN10	PN16	PN25	PN10	PN16	PN25
50	150	-	165	-	-	125	-	-	4-Ø19	-
65	170	-	185	-	-	145	-	-	4-Ø19	-
80	180	-	200	-	-	160	-	-	8-Ø19	-
100	190	220	220	235	180	180	190	8-Ø19	8-Ø19	8-Ø23
125	200	250	250	270	210	210	220	8-Ø23	8-Ø23	8-Ø28
150	210	285	285	300	240	240	250	8-Ø23	8-Ø23	8-Ø28
200	230	340	340	260	295	295	310	8-Ø23	12-Ø23	12-Ø31
250	250	395	405	425	350	355	370	12-Ø23	12-Ø28	12-Ø34
300	270	445	460	485	400	410	430	12-Ø23	12-Ø28	16-Ø34
350	290	505	520	555	460	470	490	16-Ø23	16-Ø28	16-Ø37
400	310	565	580	620	515	525	550	16-Ø28	16-Ø31	16-Ø41
450	330	615	640	670	565	585	600	20-Ø28	20-Ø31	20-Ø41
500	350	670	715	730	620	650	660	20-Ø28	20-Ø34	16-Ø41
600	390	780	840	845	725	770	770	20-Ø31	20-Ø37	16-Ø41
700	430	910	910	960	840	840	875	24-Ø31	24-Ø37	16-Ø41
800	470	1025	1025	1085	950	950	990	24-Ø34	24-Ø40	16-Ø41
900	510	1125	1125	1185	1050	1050	1090	28-Ø34	28-Ø40	16-Ø41
1000	550	1230	1255	1320	1160	1170	1210	28-Ø37	28-Ø43	16-Ø41
1200	630	1455	1485	1530	1380	1390	1420	32-Ø40	32-Ø49	32-Ø56

Technische Änderungen vorbehalten

We reserve the right to make technical modifications

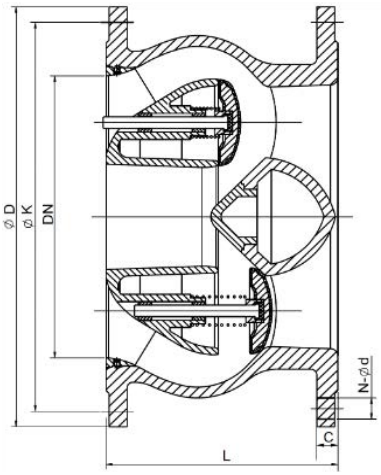

Valve-DN400-DN1200

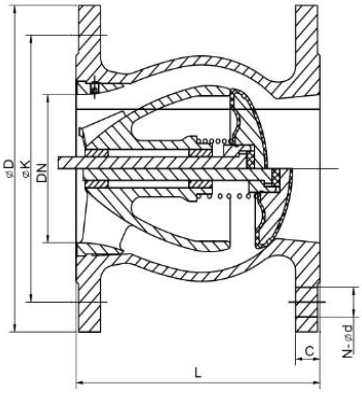

Valve-DN50-DN350

27.06.2022 - 06-NCV-0001

CTV Armaturen & Penstocks GmbH, Pliniusstrasse 6, 48488 Emsbüren, Deutschland
Tel: +49 (0)5903 217 6866, Email: info@ctv-valves.com

CTV Armaturen & Penstocks GmbH

Modell 06K: Kugel-Rückschlagventil nach DIN EN1171

mit Ablassschraube - PN10, PN16 - Baulänge nach EN558-1-series 48

aus Gusseisen mit Kugelgraphit nach EN-GJS-400-15

Type 06K: Ball Check Valve acc. DIN EN1171

with drain plug - PN10, PN16 - face to face length to EN558-1-series 48

of ductile cast iron acc. to EN-GJS-400-15

DN 50 - DN 500

CTV Armaturen & Penstocks GmbH, Pliniusstrasse 6, 48488 Emsbüren, Deutschland
Tel: +49 (0)5903 217 6866, Email: info@ctv-valves.com

WRAS APPROVED PRODUCT · DIN DVGW CERT · ISO 9001:2015 · ISO 3834

Kugel-Rückschlagventil
Ball check valve

CTV Armaturen & Penstocks GmbH

Verwendungsbereich: Wasser Range of application: Potable water				
Nennweite Size DN	Nenndruck Pressure rating PN	Wasser-Prüfdruck in bar Hydrost. test pressure in bar Gehäuse / Body	 Sitz / Seat	Zulässiger Betriebsdruck in bar Admissible working pressure in bar bis 80°C / up to 80°C
50 - 500	10. - 16	15 - 24	10. - 16	10. - 16

Im Auftragsfall bitte Betriebsverhältnisse angeben.

In case of order please specify the working conditions

Werkstoffe / Zubehör, Materials / Equipment		
Katalog-Nr. / Catalogue No.		**06K-DN50-500-48-0002**
Gehäuse	Body	GGG (EN-GJS-400-15)
Abdeckhaube	bonnet	GGG (EN-GJS-400-15)
Dichtung	gasket	EPDM oder NBR / EPDM or NBR
Ball	ball	Stahl + EPDM oder NBR / steel + EPDM or NBR
Schraube	bolts	SS304
Stöpsel	plug	SS304
*Epoxid-Pulverbeschichtung, blau / epoxy powder coating, blue (Min 250 µm) andere Materialien auf Anfrage /other materials on request		

Nennweite Size	Baulänge nach	Flansch Flange Ø		Maße Dim.	Gewicht Weight	
DN mm	L mm	D mm		H mm	~ kg	
		PN10	PN16		PN10	PN16
50	200	165	165	130	8,6	8,6
65	240	185	185	150	11,2	11,2
80	260	200	200	180	14,5	14,5
100	300	220	220	203	18,5	18,5
125	350	250	250	211	27,1	27,1
150	400	285	285	300	40,1	40,1
200	500	340	340	365	67	67
250	600	405	405	445	140	140
300	700	460	460	505	180	180
350	800	505	520	536	270	270
400	900	565	580	645	305	305
500	1100	715	715	700	570	570

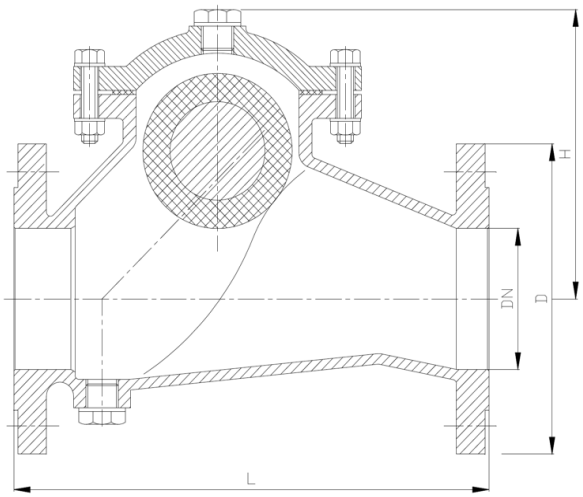

Technische Änderungen vorbehalten

We reserve the right to make technical modifications

27.05.2022 -06K-DN50-500-48-0002

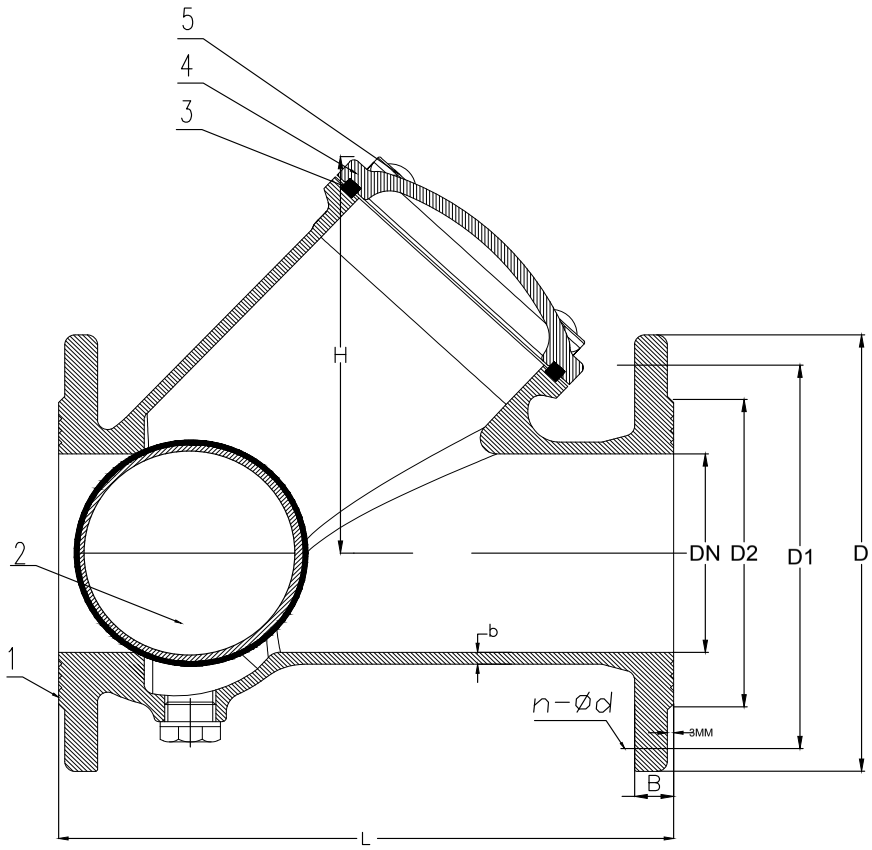

DN	L	D		D1		D2		B		b	H	n-d	
		PN10	PN16	PN10	PN16	PN10	PN16	PN10	PN16			PN10	PN16
50	200	165	165	125	125	100	102	19	19	6	130	4-19	4-19
65	240	185	185	145	145	120	122	19	19	6	150	4-19	4-19
80	260	200	200	160	160	135	135	19	19	6,5	180	8-19	8-19
100	300	220	220	180	180	156	156	19	19	6,8	203	8-19	8-19
125	350	250	250	210	210	186	186	19	19	7,5	211	8-19	8-19
150	400	285	285	240	240	212	212	19	19	7,5	300	8-23	8-23
200	500	340	340	295	295	268	268	20	20	9	365	8-23	12-23
250	600	405	405	350	355	318	318	22	22	10	445	12-23	12-28
300	700	460	460	400	410	370	373	24,5	24,5	11	505	12-23	12-28

Technical requirements / Technische Anforderungen

1. *Face to face length to* / Baulänge nach EN 588-1 series 48
2. *Flange to* / Flansch nach EN1092-2
3. *working temperature* / Betriebstemperatur: -20° - 80°C
4. *working pressure* / Betriebsdruck: PN10-PN16

S.N.	*name* /	Bezeichnung	material
5	*Bolt*	Schraube	DIN912
4	*Bonnet*	Abdeckhaube	GGG50
3	*Gasket*	Dichtung	NBR
2	*Ball float*	Ball	NBR
1	*Body*	Gehäuse	GGG50

Nr/no	Name	Tag/day	Änderung/revision
01			

CTV Armaturen & Penstocks GmbH

Pliniusstraße 6, 48488 Emsbueren

Werkstoff	see BOOM	
	Name	Tag/day
Gezeichnet/drawn	Alina Arndt	22.11.2021
Geprüft/Checked By	Nabeel kekheya	

Baulängen n. DIN EN 558/
face-to-face dim. acc. to DIN EN 558

(Änderungen vorbehalten
Subject to change)

Maßstab
Scale
-/-

Flanged Ball Check Valves
DN50 - DN300
PN10 PN16

drawing number:
06K-DN50-DN300

Format/size DIN A3

DN	L	D		D1		D2		B		f	H	Z-d	
		PN10	PN16	PN10	PN16	PN10	PN16	PN10	PN16			PN10	PN16
350	800	505	520	460	470	428	430	25	26,5	4	536	16-23	16-28
400	900	565	580	515	525	480	483	25	28	4	645	16-28	16-31
500	1100	715	715	620	650	585	610	32	32	4	700	20-28	20-34

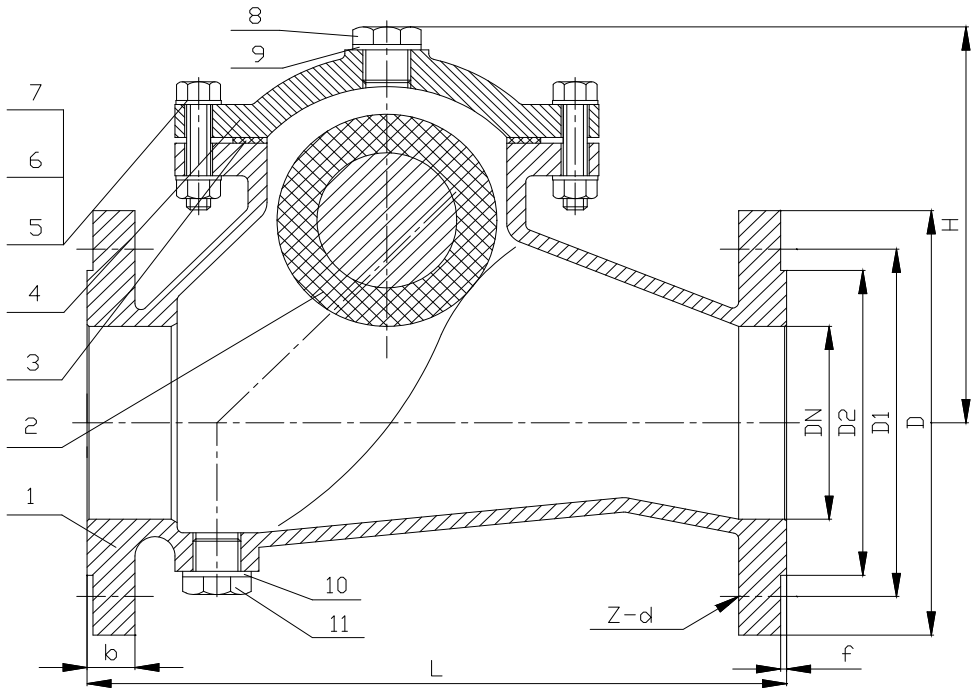

Technical requirements / Technische Anforderungen

1. *Face to face length to* / Baulänge nach EN 588-1 series 48
2. *Flange to* / Flansch nach EN1092-2
3. *working temperature* / Betriebstemperatur: -20° - 80°C
4. *working pressure* / Betriebsdruck: PN10-PN16

S.N.	*name* /	Bezeichnung	material
11	*Plug*	Pfropfen	A3
10	*Minipad*	Minipad	TFL
9	*Minipad*	Minipad	TFL
8	*Plug*	Stecker	A3
7	*Nut*	Mutter	A3
6	*Washer*	Unterlegscheibe	A3
5	*Bolt*	Schraube	A3
4	*Bonnet*	Abdeckhaube	GGG50
3	*Gasket*	Dichtung	NBR
2	*Ball float*	Ball	EPDM
1	*Body*	Gehäuse	GGG50

Nr/no	Name	Tag/day	Änderung/revision
01			

CTV Armaturen & Penstocks GmbH

Pliniusstraße 6, 48488 Emsbueren

Werkstoff	see BOOM	
	Name	Tag/day
Gezeichnet/drawn	Alina Arndt	22.11.2021
Geprüft/Checked By	Nabeel kekheya	

Baulängen n. DIN EN 558/
face-to-face dim. acc. to DIN EN 558

(Änderungen vorbehalten
Subject to change)

Maßstab
Scale

Flanged Ball Check Valves
DN350 - DN500
PN10 PN16

drawing number:
06K-DN350-DN400

Format/size DIN A3

CTV Armaturen & Penstocks GmbH

Modell 06: Rückschlagklappe

PN16 aus Gusseisen mit Kugelgraphit GGG Baulänge nach DIN3202; F6

Type 06: swing check valve

PN 16 of ductile cast iron GGG face to face acc to DIN3202; F6

DN200 - 900

CTV Armaturen & Penstocks GmbH, Pliniusstrasse 6, 48488 Emsbüren, Deutschland
Tel: +49 (0)5903 217 6866, Email: info@ctv-valves.com

WRAS APPROVED PRODUCT · DIN DVGW CERT · ISO 9001:2015 · ISO 3834

Rückschlagklappe

swing check valve

CTV Armaturen & Penstocks GmbH

Verwendungsbereich: sauberes Wasser Range of application: clean water				
Nennweite Size DN	Nenndruck Pressure rating PN	Wasser-Prüfdruck in bar Hydrost. test pressure in bar Gehäuse / Body	 Sitz / Seat	Zulässiger Betriebsdruck in bar Admissible working pressure in bar bis 80°C / up to 80°C
200 - 900	16	24	17.6	16

Im Auftragsfall bitte Betriebsverhältnisse angeben.

In case of order please specify the working conditions

Werkstoffe / Zubehör, Materials / Equipment		
Katalog-Nr. / Catalogue No.		**06Z-swigcheckvalve-0003**
Gehäuse	Body	Gusseisen mit Kugelgraphit / Ductile Iron GGG50 (GJS 500-
Scheibe	Disc	Gusseisen mit Kugelgraphit + Gummi / Ductile Iron + rubber
Splint	Cotter Pin	Edelstahl / Stainless Steel (AISI 304 / 316)
Arm	Arm	Gusseisen mit Kugelgraphit / Ductile Iron GGG50 (GJS 500-
Stopfen	Plug	Karbonstahl / carbon steel (A3)
Dichtung	Gasket	EPDM / EPDM
Ventildeckel	Bonnet	Gusseisen mit Kugelgraphit / Ductile Iron GGG50 (GJS 500-
Stopfbuchse	Gland	Gusseisen mit Kugelgraphit / Ductile Iron GGG50 (GJS 500-
Scharnier	Hinge	Gusseisen mit Kugelgraphit / Ductile Iron GGG50 (GJS 500-

Nenn-Size	Maße Dimmensions							
DN	L	D	D1	D2	b	f	H	Z-d
mm	(F/F)	mm	mm	mm	mm	mm	mm	mm
200	500	340	295	266	30	3	258	12-23
250	600	405	355	319	32	3	290	12-28
300	700	460	410	370	32	4	325	12-28
350	800	520	470	429	36	4	361	16-28
400	900	580	525	480	38	4	388	16-31
450	1000	640	585	548	40	4	450	20-31
500	1100	715	650	609	42	4	518	20-34
600	1300	840	770	720	48	5	620	20-37
800	1700	1025	950	901	58	5	763	24-40
900	1900	1125	1050	1001	62	5	950	28-40

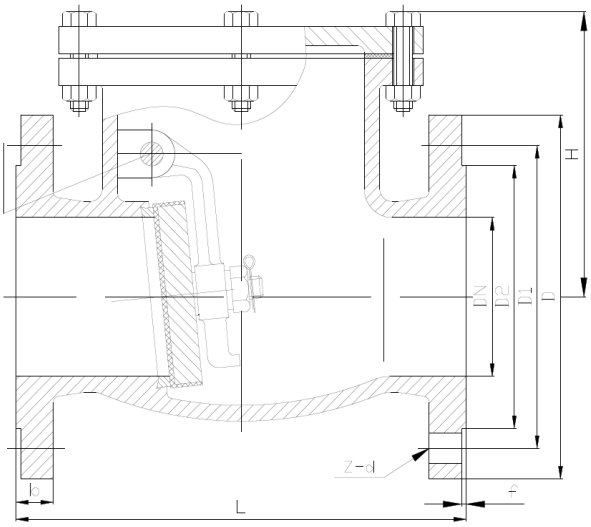

Technische Änderungen vorbehalten

We reserve the right to make technical modifications

02.08.2022 - 06Z-swigcheckvalve-0003

CTV Armaturen & Penstocks GmbH, Pliniusstrasse 6, 48488 Emsbüren, Deutschland
Tel: +49 (0)5903 217 6866, Email: info@ctv-valves.com

technical data / Technische Daten		
pressure rating / Nenndruck	1.6	MPa
hydrotest pressure / Prüfdruck: *Body test* / Gehäuse	2.4	
sealing test / Dichtung	1.76	
medium / Medium: *water* / Wasser *working temperature* / Arbeitstemperatur 80°C		

DN	D	D1	D2	L	b	f	Z-d	H
200	340	295	266	500	30	3	12 - Ø23	258
250	405	355	319	600	32	3	12 - Ø28	290
300	460	410	370	700	32	4	12 - Ø28	325
350	520	470	429	800	36	4	16 - Ø28	361
400	580	525	480	900	38	4	16 - Ø31	388
450	640	585	548	1000	40	4	20 - Ø31	450
500	715	650	609	1100	42	4	20 - Ø34	518
600	840	770	720	1300	48	5	20 - Ø37	620
800	1025	950	901	1700	58	5	24 - Ø40	763
900	1125	1050	1001	1900	62	5	28 - Ø40	950

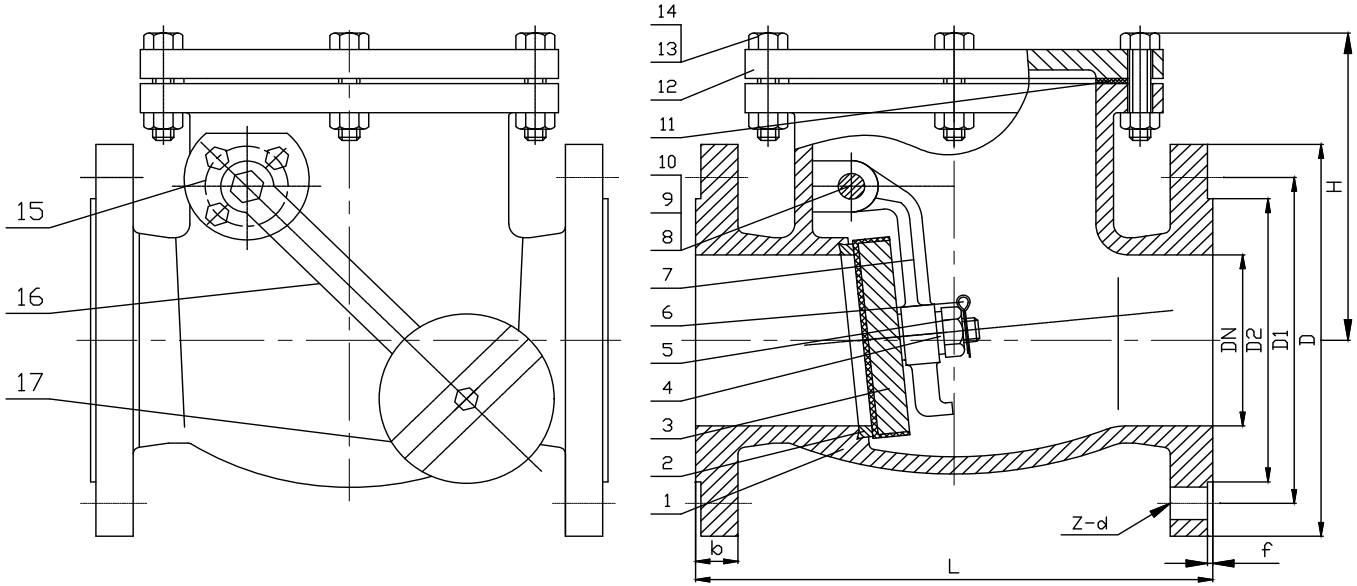

S.N.	*name /*	Bezeichnung	material
17	*hammer*	Hammer	GGG50
16	*hinge*	Scharnier	GGG50
15	*gland*	Stopfbuchse	GGG50
14	*nut*	Mutter	A3
13	*bolt*	Schraube	A3
12	*bonnet*	Klappe	GGG50
11	*gasket*	Dichtung	
10	*o-ring*	O-Ring	
9	*plug*	Stopfen	A3
8	*hing pin*	Scharnierstift	SS420
7	*arm*	Arm	GGG50
6	*cotter pin*	Splint	SS304
5	*nut*	Mutter	A3
4	*washer*	Unterlegscheibe	A3
3	*disc*	Scheibe	GGG50/EPDM
2	*body seat ring*	Gehäusesitzring	
1	*body*	Gehäuse	GGG50

Technical requirements / Technische Anforderungen

1. *Face to face length to* / Baulänge nach DIN3202-F6
2. *Nominal pressure: PN16*
3. *pressure test to* / Prüfung nach EN12266-1

Nr/no	Name	Tag/day	Änderung/revision
01			

CTV Armaturen & Penstocks GmbH

Pliniusstraße 6, 48488 Emsbueren

Werkstoff	see BOOM	
	Name	Tag/day
Gezeichnet/drawn	Alina Arndt	04.08.2022
Geprüft/Checked By	Nabeel kekheya	

Baulängen n. DIN EN 558/
face-to-face dim. acc. to DIN EN 558

(Änderungen vorbehalten
Subject to change)

Maßstab
Scale
./.

swing check valve
Rückschlagklappe
PN16

drawing number:
06Z-swingcheckvalve-S00595

Format/size DIN A3

CTV Armaturen & Penstocks GmbH

Modell 06KRK: Kipp-Rückschlagklappe

PN10, 16 aus Gusseisen mit Kugelgraphit GGG
Baulänge nach ISO5752 - Serie 14

Type 06: Check valve tilting type

PN 10, 16 of ductile cast iron GGG
face to face acc to ISO5752 - series 14

DN200 - 1000

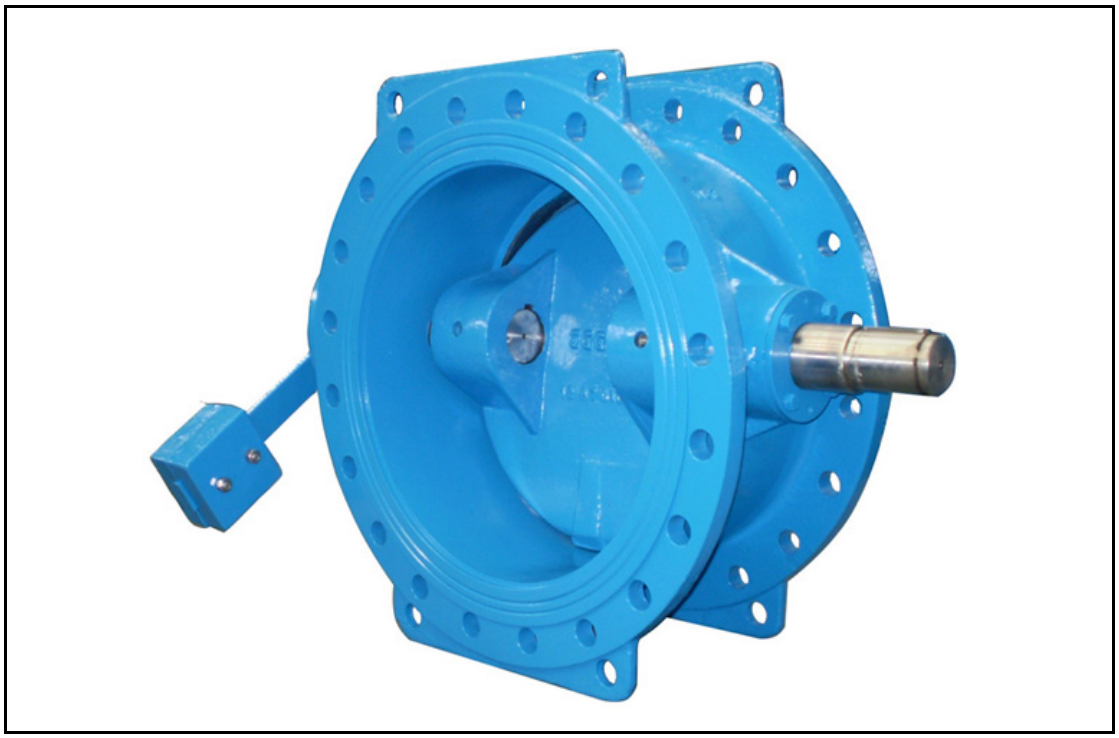

CTV Armaturen & Penstocks GmbH, Pliniusstrasse 6, 48488 Emsbüren, Deutschland
Tel: +49 (0)5903 217 6866, Email: info@ctv-valves.com

ISO 9001:2015 ISO 3834

Kipp-Rückschlagklappe

Check Valve tilting type

CTV Armaturen & Penstocks GmbH

Verwendungsbereich: sauberes Wasser Range of application: clean water				
Nennweite Size DN	Nenndruck Pressure rating PN	Wasser-Prüfdruck in bar Hydrost. test pressure in bar Gehäuse / Body	 Sitz / Seat	Zulässiger Betriebsdruck in bar Admissible working pressure in bar bis 80°C / up to 80°C
200 - 1000	10, 16	15, 24	11, 17.6	10, 16

Im Auftragsfall bitte Betriebsverhältnisse angeben.

In case of order please specify the working conditions

Werkstoffe / Zubehör, Materials / Equipment		
Katalog-Nr. / Catalogue No.		**06KRK-tiltingtype-0004**
Ausgleichsgewicht	counterweight	GG25
Hebel	lever	
Passfeder	flat key	Edelstahl SS420 / Stainless Steel SS420
Welle	shaft	Edelstahl SS420 / Stainless Steel SS420
O-Ring	o ring	EPDM / EPDM
Stopfbuchsendeckel	gland cover	Edelstahl SS304 / Stainless Steel SS304
Gehäuse	body	Gusseisen mit Kugelgraphit / Ductile Iron (GJS 500-7)
Gehäusedichtring	body seal ring	Edelstahl SS304 / Stainless Steel SS304
Scheibe	disc	Gusseisen mit Kugelgraphit / Ductile Iron GGG40 (GJS 500-7

Nenn-weite Size	Maße Dimensions				
DN mm	L (F/F)	L1 mm	L2 mm	H mm	E mm
200	230	260	240	350	50
250	250	294	285	420	62.5
300	270	321	314	480	75
350	290	383	360	530	70
400	310	414	389	590	80
450	330	469	444	650	90
500	350	521	487	725	100
600	390	572	502	850	120
700	430	635	595	920	140
800	470	711	680	1035	160
900	510	963	898	1135	150
1000	550	945	890	1265	200

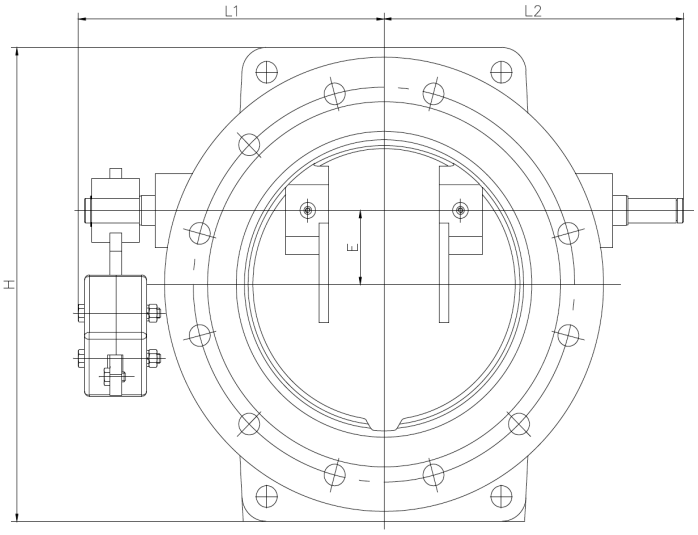

Technische Änderungen vorbehalten

We reserve the right to make technical modifications

17.08.2022 - 06KRK-tiltingtype-0004

Modell 06-SKRK: Kipp-Rückschlagventil mit Schrägsitz

CTV Armaturen & Penstocks GmbH

Metallischdichtend nach EN16767
Baulänge nach EN558 - Serie 14 / F4

PN10, PN16 aus Gusseisen mit Kugelgraphit GGG

Type 06-SKRK: Slanted Seat Tilting Check Valve

metal seated according to EN16767
face to face acc to EN558 - series 14 / F4
PN10, PN16 of ductile cast iron GGG

DN200 - 1200

CTV Armaturen & Penstocks GmbH, Pliniusstrasse 6, 48488 Emsbüren, Deutschland
Tel: +49 (0)5903 217 6866, Email: info@ctv-valves.com

Kipp-Rückschlagventil mit Schrägsitz
Slanted Seat Tilting Check Valve

CTV Armaturen & Penstocks GmbH

Verwendungsbereich: sauberes Wasser Range of application: clean water				
Nennweite Size DN	Nenndruck Pressure rating PN	Wasser-Prüfdruck in bar Hydrost. test pressure in bar Gehäuse / Body	 Sitz / Seat	Zulässiger Betriebsdruck in bar Admissible working pressure in bar bis 130°C / up to 130°C
200 - 1200	10, 16	15, 24	11, 17.6	10, 16

Im Auftragsfall bitte Betriebsverhältnisse angeben.

In case of order please specify the working conditions

Werkstoffe / Zubehör, Materials / Equipment		
Katalog-Nr. / Catalogue No.		**06-SKRK-0005**
Gehäuse	Body	Gusseisen mit Kugelgraphit / Ductile Iron GGG50 (GJS 500-7
Scheibe	Disc	Gusseisen mit Kugelgraphit / Ductile Iron GGG50 (GJS 500-7)
Scheibe Dichtung	Disc Gasket	EPDM / EPDM
Dichtungsring	Gasket ring	Gusseisen mit Kugelgraphit / Ductile Iron GGG50 (GJS 500-7)
Spindel	stem	Edelstahl / Stainless Steel (AISI 304)
Spindelbuchse	stem bushing	Bronze / Bronze
Spindelabdeckung	Stem cover	Gusseisen mit Kugelgraphit / Ductile Iron GGG50 (GJS 500-7)
Beschichtung	Coating	EKB RAL 5015 min 250 µm nach DVGW W-270 / Epoxy Coating RAL 5015 min 250 µm

Nenn-	Maße							Gewicht			
Size	Dimmensions							weight			
DN	D		e1	h1	l1	l2	t	kg		with damper (Kg)	
mm	PN10	PN16	PN10/16					PN10	PN16	PN10	PN16
200	340	340	145	245	230	160	55	40	40	43,5	43,5
250	400	400	170	270	250	180	75	65	65	68,5	68,5
300	455	455	200	340	270	200	100	83	83	92	92
350	520	520	225	370	290	225	135	118	118	127	127
400	575	575	270	420	310	250	150	145	145	160	160
450	615	640	300	460	330	250	190	190	210	205	225
500	670	715	325	500	350	300	210	220	250	244	274
600	780	840	385	585	390	330	265	315	365	350	400
700	895	910	450	650	430	400	320	420	470	468	518
800	1015	1025	500	750	470	450	380	640	750	704	814
900	1115	1125	565	855	510	550	420	910	980	984	1054
1000	1230	1255	630	890	550	600	470	1150	1250	1235	1335
1200	1450	-	730	1020	630	700	670	1520	-	1600	-

Technische Änderungen vorbehalten

We reserve the right to make technical modifications

19.08.2022 - 06-SKRK-0005

A

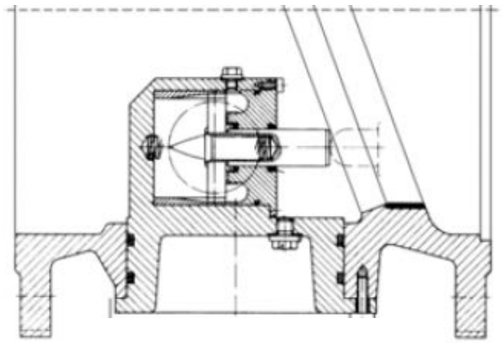

DN	D PN10	D PN16	b PN10	b PN16	d2 PN10	d2 PN16	e1	h1	h2 PN10	h2 PN16	k PN10	k PN16	l1	l2	t	no. of holes PN10	no. of holes PN16	kg PN10	kg PN16	kg (with damper) PN10	kg (with damper) PN16
200	340	340	20	20	23	23	145	245	175	175	295	295	230	160	55	8	12	40	40	43,5	43,5
250	400	400	22	22	23	28	170	270	205	205	350	355	250	180	75	12	12	65	65	68,5	68,5
300	455	455	24.5	24.5	23	28	200	340	232	232	400	410	270	200	100	12	12	83	83	92	92
350	520	520	26.5	26.5	23	28	225	370	265	265	460	470	290	225	135	16	16	118	118	127	127
400	575	575	28	28	28	31	270	420	295	295	515	525	310	250	150	16	16	145	145	160	160
450	615	640	26.5	31.5	28	31	300	460	312	325	565	585	330	250	190	20	20	190	210	205	225
500	670	715	26.5	31.5	28	34	325	500	340	362	620	650	350	300	210	20	20	220	250	244	274
600	780	840	30	36	31	37	385	585	395	425	725	770	390	330	265	20	20	315	365	350	400
700	895	910	32.5	39.5	31	37	450	650	455	460	840	840	430	400	320	24	24	420	470	468	518
800	1015	1025	35	43	34	40	500	750	525	520	950	950	470	450	380	24	24	640	750	704	814
900	1115	1125	37.5	46.5	34	40	565	855	565	570	1050	1050	510	550	420	28	28	910	980	984	1054
1000	1230	1225	40	50	37	43	630	890	620	635	1160	1170	550	600	470	28	28	1150	1250	1235	1335

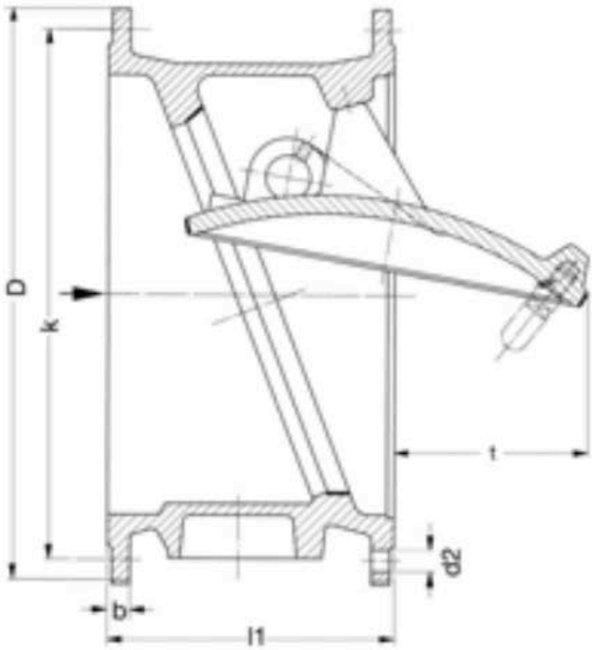

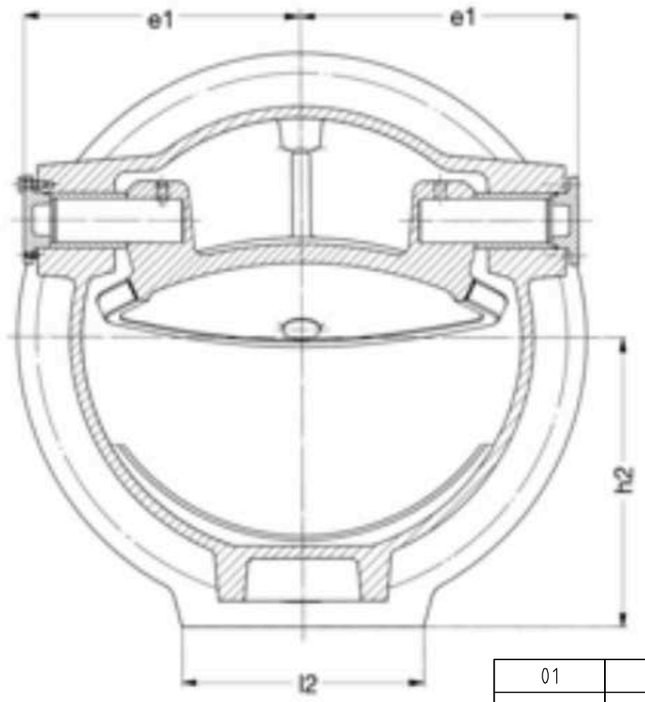

A

technical data / Technische Daten		
pressure rating / Nenndruck	1.0 / 1.6	MPa
hydrotest pressure / Prüfdruck: *Body test* / Gehäuse *sealing test* / Dichtung	1.5 / 2.4 1.1 / 1.76	MPa
medium / Medium: *water* / Wasser *working temperature* / Arbeitstemperatur -10° - 130°C		

S.N.	*name /*	Bezeichnung	material
7	*Main Body*	Gehäuse	GGG50
6	*Disc*	Scheibe	Bronze
5	*Disc Gasket*	Scheibendichtung	AISI304
4	*Gasket Ring*	Dichtungsring	GGG50
3	*Stem*	Spindel	EPDM
2	*Stem Bushing*	Spindelbuchse	GGG50
1	*Stem Cover*	Spindelabdeckung	GGG50

Technical requirements / Technische Anforderungen

1. *Design acc. / Design nach EN12334*
2. *Face to face length to /* Baulänge nach EN 588-14 (*DIN3202-F4)*
3. *pressure test to /* Prüfung nach EN12266-1
4. metal seated acc. / Metallischdichtend nach EN16767
5. Flange drilling acc. / Flanschanschluss nach EN1092-2

Nr/no	Name	Tag/day	Änderung/revision
01			

CTV Armaturen & Penstocks GmbH

Pliniusstraße 6, 48488 Emsbueren

Werkstoff	see BOOM	
	Name	Tag/day
Gezeichnet/drawn	Alina Arndt	23.08.2022
Geprüft/Checked By	Nabeel kekheya	

Baulängen n. DIN EN 558/
face-to-face dim. acc. to DIN EN 558

(Änderungen vorbehalten
Subject to change)

Maßstab
Scale
./.

slanted seat tilting check valve
Kipp-Rückschlagventil mit Schrägsitz
PN10, PN16

drawing number:
06SKRK-PN10-PN16

Format/size DIN A3

09

Model 09 - DVGW Flanged Butterfly Valves
DN 80 - DN 1200

CTV Armaturen & Penstocks GmbH

Model 09: Doppelexzentrische Absperrklappe

Design nach DIN EN 593
Baulänge nach DIN EN 558-Serie 14
PN10, PN16 aus Gusseisen mit Kugelgraphit GGG

Type 09: Double eccentric butterfly valve

Design acc. to DIN EN 593
face to face length acc. to DIN EN 558-series 14
PN10, PN16 of ductile cast iron GGG

DN 200 - DN 1600

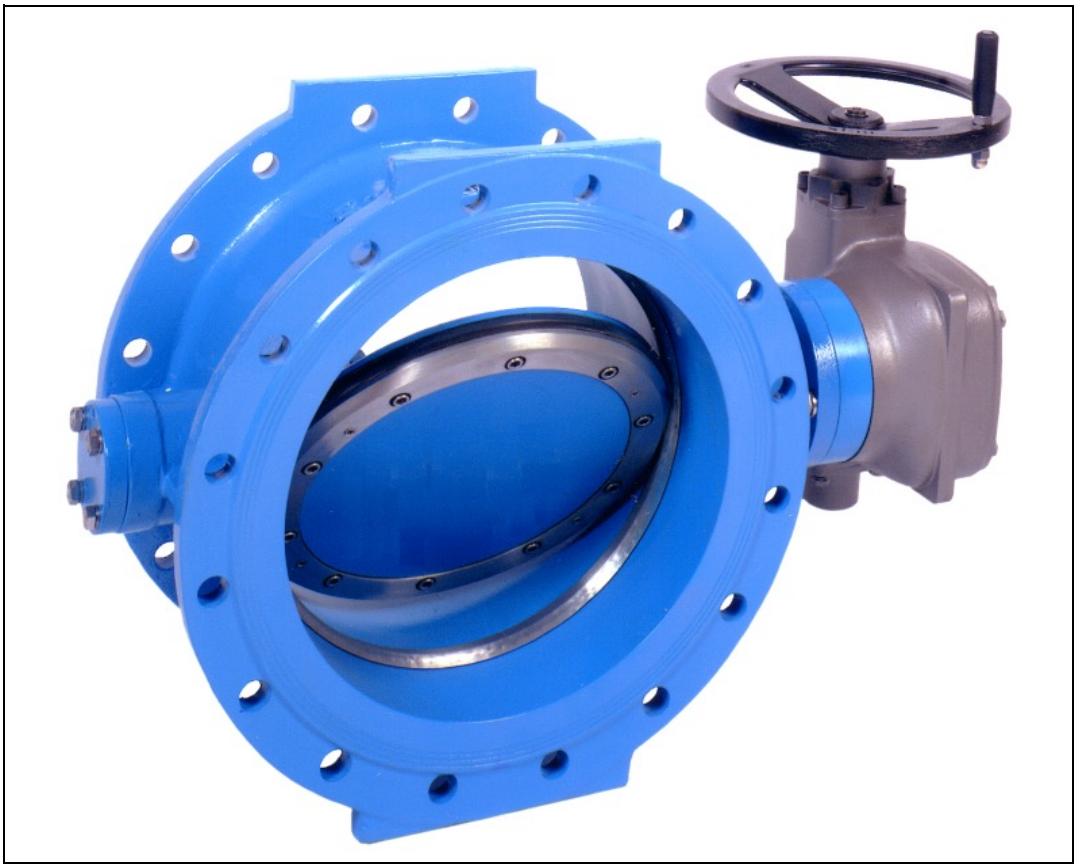

CTV Armaturen & Penstocks GmbH, Pliniusstrasse 6, 48488 Emsbüren, Deutschland
Tel: +49 (0)5903 217 6866, Email: info@ctv-valves.com

WRAS APPROVED PRODUCT · DIN DVGW CERT · ISO 9001:2015 · ISO 3834

Doppelexzentrische Absperrklappe
Double eccentric butterfly valve

CTV Armaturen & Penstocks GmbH

Verwendungsbereich: Abwasser und Trinkwasser. Alle Medienberührende Teile nach UBA-KTW und DVGW W270 Range of application: Sewage and Drinking Water. All contact parts according to UBA-KTW and DVGW W270				
Nennweite Size DN	Nenndruck Pressure rating PN	Wasser-Prüfdruck in bar Hydrost. test pressure in bar Gehäuse / Body	 Sitz / Seat	Zulässiger Betriebsdruck in bar Admissible working pressure in bar bis 120°C / up to 120°C 1)
200 - 1600	10, 16	15, 24	11, 17.6	10, 16

Im Auftragsfall bitte Betriebsverhältnisse angeben.
In case of order please specify the working conditions

Werkstoffe / Zubehör, Materials / Equipment		
Katalog-Nr. / Catalogue No.		**09Z-BareShaft-0001**
Sicherungsstift	locking pin	Edelstahl V2A-SS420 / Stainless Steel A2-SS420
Passfeder	key	Edelstahl V2A-SS420 / Stainless Steel A2-SS420
Oberer Schaft	upper shaft	Edelstahl V2A-SS420 / Stainless Steel A2-SS420
Gehäuse	body	GJS500-7 / GJS500-7
O-Ring	o ring	EPDM oder NBR / EPDM or NBR
Gehäusesitzring	body seat ring	Edelstahl SS304 / Stainless Steel SS304
Halterung	retainer	Edelstahl SS304 / Stainless Steel SS304
Scheibe	disc	GJS500-7 / GJS500-7
untere Welle	lower shaft	Edelstahl SS420 / Stainless Steel SS420
Wellendeckel	shaft cover	GJS400-15/500-7 / GJS400-15/500-7

Nenn-	Baulänge	Maße											
Size	face to face	Dimmensions											
DN	L	D1		D2		D3		H		L1		L2	
mm	mm	PN10	PN16	PN10	PN16	PN10	PN16	PN10	PN16	PN10	PN16	PN10	PN16
200	230	340	340	295	295	266	266	40	40	198	198	295	295
250	250	395	405	350	355	319	319	45	50	219	230	350	355
300	270	445	460	400	410	370	370	64	64	254	254	400	410
350	290	505	520	460	470	429	429	64	70	279	295	460	470
400	310	565	580	515	525	480	480	70	92	320	334	515	525
450	330	615	640	565	585	530	548	92	100	359	368	565	585
500	350	670	715	620	650	582	609	100	110	393	400	620	650
600	390	780	840	725	770	682	720	110	110	450	480	725	770
700	430	895	910	840	840	794	794	110	114	530	563	840	840
800	470	1015	1025	950	950	901	901	114	130	614	623	950	950
900	510	1115	1125	1050	1050	1001	1001	130	146	675	698	1050	1050
1000	550	1230	1255	1160	1170	1112	1112	146	165	748	766	1160	1170
1100	590	1340	1355,0	1270	1270	1218	1218	165	202	795	835	1270	1270
1200	630	1455	1485	1380	1390	1328	1328	165	202	865	910,5	1380	1390
1300	670	1570	1585	1490	1490	1438	1430	202	200	930	1008	1490	1490
1400	710	1675	1685	1590	1590	1530	1530	202	200	1011	1063	1590	1590
1500	750	1785	1820	1700	1710	1640	1640	218	240	1112	1120	1700	1710
1600	790	1915	1930	1820	1820	1750	1750	250	280	1161	1172	1820	1820

Technische Änderungen vorbehalten
We reserve the right to make technical modifications

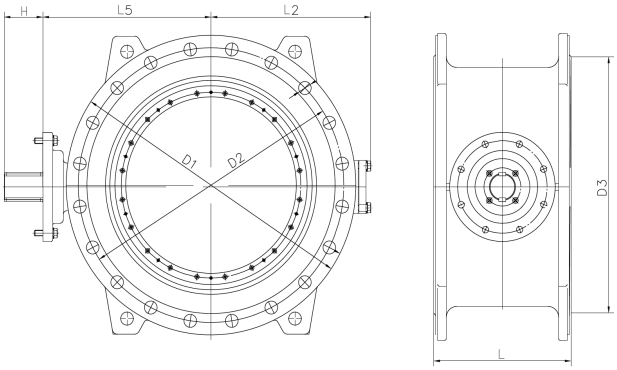

01.08.2022 - 09Z-BareShaft-0001

CTV Armaturen & Penstocks GmbH, Pliniusstrasse 6, 48488 Emsbüren, Deutschland
Tel: +49 (0)5903 217 6866, Email: info@ctv-valves.com

WRAS APPROVED PRODUCT · DIN DVGW CERT · ISO 9001:2015 · ISO 3834

PN16	D1	D2	D3	B	f	L	n-d	d1	E3	top flange	H1	E1	E2
DN200	Ø340	Ø295	Ø266	20	3	230	12-Ø23	Ø30	40	F10	350	198	227
DN250	Ø405	Ø355	Ø319	22	3	250	12-Ø28	Ø40	50	F12	415	230	273
DN300	Ø460	Ø410	Ø370	24.5	4	270	12-Ø28	Ø40	64	F12	470	254	296
DN350	Ø520	Ø470	Ø429	26.5	4	290	16-Ø28	Ø50	70	F14	530	295	342
DN400	Ø580	Ø525	Ø480	28	4	310	16-Ø31	Ø50	84	F14	590	334	372
DN450	Ø640	Ø585	Ø548	30	4	330	20-Ø31	Ø55	100	F16	650	368	423
DN500	Ø715	Ø650	Ø609	31.5	4	350	20-Ø34	Ø60	110	F16	725	400	460
DN600	Ø840	Ø770	Ø720	36	5	390	20-Ø37	Ø70	110	F25	850	480	478
DN700	Ø910	Ø840	Ø794	39.5	5	430	24-Ø37	Ø80	112	F25	920	563	555
DN800	Ø1025	Ø950	Ø901	43	5	470	24-Ø41	Ø90	120	F30	1035	623	613
DN900	Ø1125	Ø1050	Ø1001	46.5	5	510	28-Ø41	Ø100	139	F30	1135	698	689
DN1000	Ø1255	Ø1170	Ø1112	50	5	550	28-Ø44	Ø110	165	F35	1271	766	782
DN1200	Ø1485	Ø1390	Ø1328	57	5	630	32-Ø50	Ø130	159	F35	1495	910.5	903
DN1400	Ø1685	Ø1590	Ø1530	60	5	710	36-Ø50	Ø155	167	F40	1695	1063	1071
DN1500	Ø1820	Ø1710	Ø1640	62.5	5	750	36-Ø57	Ø170	167	F48	1830	1120	1118
DN1600	Ø1930	Ø1820	Ø1750	65	5	790	36-Ø57	Ø170	199	F48	1940	1172	1187
DN1800	Ø2130	Ø2020	Ø1950	70	5	870	36-Ø57	Ø190	199	F48	2140	1416	1397
DN2000	Ø2345	Ø2230	Ø2150	75	5	950	48-Ø62	Ø210	199	F48	2355	1583	1496

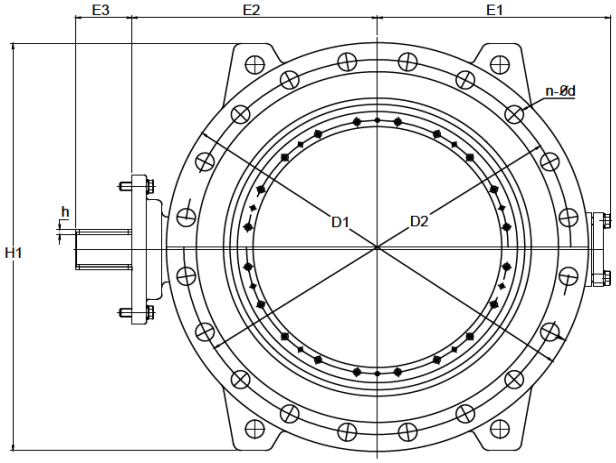

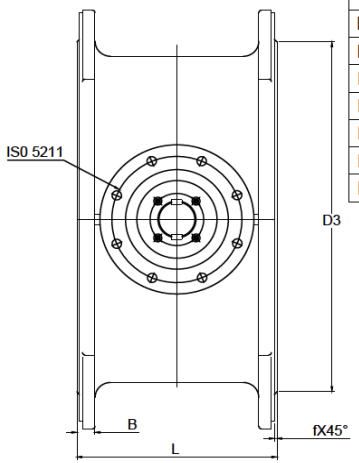

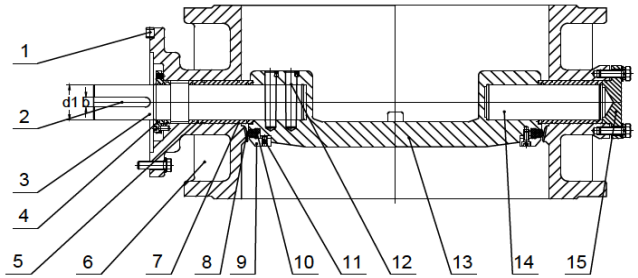

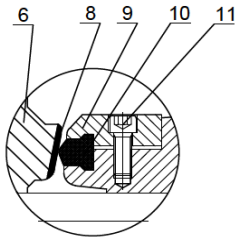

			8	body seat	SS304
15	shaft end	GJS500-7	7	O ring	EPDM
14	lower shaft	SS420	6	valve body	GJS500-7
13	valve disc	GJS500-7	5	shaft bush	QAL9-2
12	taper pin	SS420	4	packing gland	GJS500-7
11	screw	A2-70	3	upper shaft	SS420
10	disc seal	EPDM	2	key	SS420
9	retainer ring	SS304	1	loocking pin	SS420
Sr.no	Part name	Material	Sr.no	Part name	Material

Nr/no	Name	Tag/day	Änderung/revision
01			

CTV Armaturen & Penstocks GmbH

Pliniusstraße 6, 48488 Emsbueren

Werkstoff	see BOOM	
	Name	Tag/day
Gezeichnet/drawn	Alina Arndt	20.01.2022
Geprüft/Checked By	Nabeel kekheya	

Baulängen n. DIN EN 558/
face-to-face dim. acc. to DIN EN 558

(Änderungen vorbehalten
Subject to change)

Maßstab
Scale

Butterfly Valve
PN 16

drawing number:

09Z - PN16 BFV (CTV)

Format/size DIN A3

CTV Armaturen & Penstocks GmbH

Model 09: Doppelexzentrische Absperrklappe

Design nach DIN EN 593
Baulänge nach DIN EN 558-Serie 14
PN 25 aus Gusseisen mit Kugelgraphit GGG

Type 09: Double eccentric butterfly valve

Design acc. to DIN EN 593
face to face length acc. to DIN EN 558-series 14
PN25 of ductile cast iron GGG

DN 200 - DN 1600

CTV Armaturen & Penstocks GmbH, Pliniusstrasse 6, 48488 Emsbüren, Deutschland
Tel: +49 (0)5903 217 6866, Email: info@ctv-valves.com

Doppelexzentrische Absperrklappe
Double eccentric butterfly valve

CTV Armaturen & Penstocks GmbH

Verwendungsbereich: Abwasser und Trinkwasser. Alle Medienberührende Teile nach UBA-KTW und DVGW W27				
Range of application: Sewage and Drinking Water. All contact parts according to UBA-KTW and DVGW W270				
Nennweite Size DN	Nenndruck Pressure rating PN	Wasser-Prüfdruck in bar Hydrost. test pressure in bar Gehäuse / Body	 Sitz / Seat	Zulässiger Betriebsdruck in bar Admissible working pressure in bar bis 80°C / up to 80°C 1)
200 - 1600	25	37.5	27.5	25

Im Auftragsfall bitte Betriebsverhältnisse angeben.
In case of order please specify the working conditions

Werkstoffe / Zubehör, Materials / Equipment	
Katalog-Nr. / Catalogue No.	**09Z-double eccentric-PN25-0002**
Gehäuse valve body	GJS400-15/500-7 / GJS400-15/500-7
Sicherungsstif locking pin	Edelstahl V2A-SS-420 / Stainless Steel A2-SS420
Passfeder key	Edelstahl V2A-SS-420 / Stainless Steel A2-SS420
Obere Welle upper shaft	Edelstahl V2A-SS-420 / Stainless Steel A2-SS420
Wellenbuchse shaft bush	Aluminium Bronze / al-bronze
Gehäusesitz body seat	Edelstahl V2A-SS-304 / Stainless Steel A2-SS304
Dichtung disc seal	EPDM oder NBR / EPDM or NBR
Sicherungsring retainer ring	Edelstahl V2A-SS-304 / Stainless Steel A2-SS304

Nenn-	Baulänge	Maße						
Size	ace to fac	Dimensions						
DN	L	E1	E2	E3	H1	D1	D2	n-d
mm	mm	mm	mm	mm	mm	mm	mm	mm
200	230	221	245	78	370	360	310	12-28
250	250	254	282	80	435	425	370	12-31
300	270	298	312	84	495	485	430	16-31
350	290	318	365	109	565	555	490	16-34
400	310	370	416	110	630	620	550	16-37
450	330	406	426	91	680	670	600	20-37
500	350	453	469	110	740	730	660	20-37
600	390	495	546	112	855	845	770	20-41
700	430	601	615	120	970	960	875	24-44
800	470	668	697	164	1095	1085	990	24-50
900	510	695	749	159	1195	1185	1090	28-50
1000	550	844	853	159	1330	1320	1210	-
1200	630	1008	997,0	167	1540	1530	1420	32-57
1400	710	1150	1124	199	1770	1755	1640	-
1500	750	1220	1195	199	1880	1865	1750	-
1600	790	1294	1300	199	1990	1975	1860	-

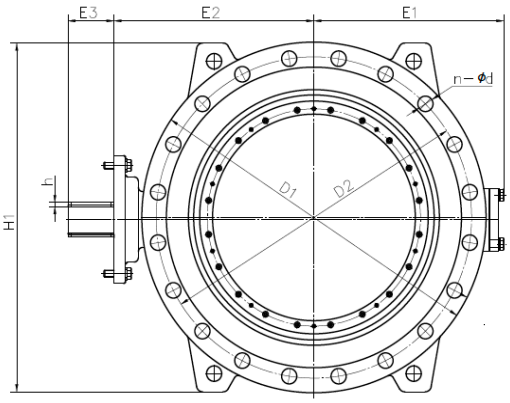

Technische Änderungen vorbehalten
We reserve the right to make technical modifications

02.08.2022 - 09Z-double eccentric-PN25-0002

CTV Armaturen & Penstocks GmbH, Pliniusstrasse 6, 48488 Emsbüren, Deutschland
Tel: +49 (0)5903 217 6866, Email: info@ctv-valves.com

Centric butterfly valves

10

Product features:

- Resilient seated centric butterfly valve acc. to DIN EN 593
- Suitable for clamping (WT) between the pipe flange acc. to DIN EN 1092, DN32–DN150 to PN16 and DN200–1200 up to PN10
- Suitable for flange mounting (LT) on the pipe flange in accordance with DIN EN 1092, DN32–DN200 to PN16 and DN250–1200 up to PN10
- Face to face dimension acc. to DIN 558, Basic series 20 (DIN 3202, Series K1)
- Tight in both directions of flow
- Enclosed seat ring, replaceable
- Shaft not touched by the medium and safe outlet
- Maintenance-free shaft bearing

Fields of application:

Water procurement and water treatment
e.g. for potable water, fresh water, raw water, etc.

Water supply
e.g. for potable water, fresh water, surface water, etc.

Industry

Further possibilities of application on request

Materials (basic version):

- Body made of ductile cast iron EN-GJS-400-15 (GGG-40)
- Flap disc made of stainless steel (1.4408)
- Shaft made of stainless steel (1.4021)
- Seat ring and O-rings of the shaft seal made of EPDM W270/KTW or NBR
- Corrosion protection by means of fusion bonded epoxy powder coating blue, RAL 5015 (average dry film thickness 250µm)

Other materials for shafts, shaft bearings, seat rings, discs, bodies as well as other accessories possible.

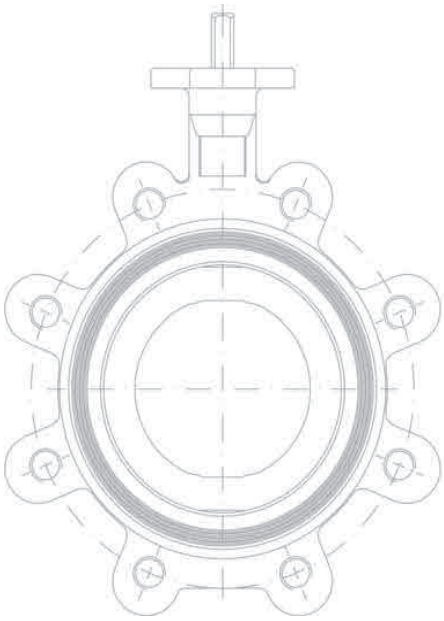

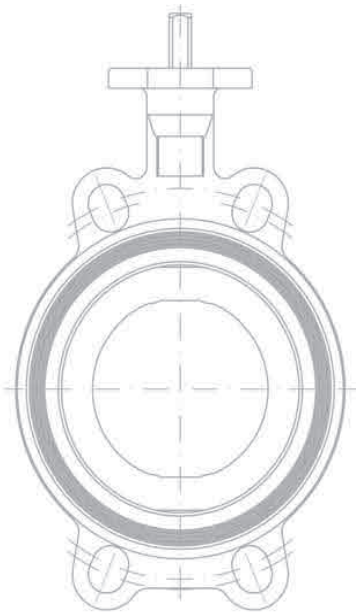

DVGW product

Drive options:

Basic version

10-2001010/-16

10-2072010/-16 LT/WT

Butterfly valve
with hand lever
PN10/16 (DN40 – DN200)

10-2022010/-16 LT/WT

Butterfly valve
with gear box and handwheel
PN10/16 (DN40 – DN1200)

10-2142010/-16 LT/WT

Butterfly valve with gear box
and chain wheel chain
made of stainless steel
or steel galvanized
PN10/16 (DN40 – DN1200)

Subject to technical changes
as well as the use of equivalent or
higher quality materials.
All representations are not binding.

Drive options:

10-2122010/-16 LT/WT

Butterfly valve
with part-turn actuator
PN10/16 (DN40 – DN300)

Basic version

10-2001010/-16

10-2032010/-16 LT/WT

Butterfly valve with gear box
and multi-turn actuator
PN10/16 (DN40 - DN1200)

10-2042010/-16 LT/WT

Butterfly valve with
pneumatic actuator
PN10/16 (DN40 – DN600)

Subject to technical changes
as well as the use of equivalent or
higher quality materials.
All representations are not binding.

Modell 11-SC1F: Einfaches Belüftungsventil

ausGusseisenmitKugelgraphitGGG - PN10 - PN16

CTV Armaturen & Penstocks GmbH

Type 11-SC1F: Single Function Air Release Valve

of ductile cast iron GGG - PN10 - PN16

DN15-DN25

CTV Armaturen & Penstocks GmbH, Pliniusstrasse 6, 48488 Emsbüren, Deutschland
Tel: +49 (0)5903 217 6866, Email: info@ctv-valves.com

Einfaches Belüftungsventil

Single Function Air Release Valve

CTV Armaturen & Penstocks GmbH

Verwendungsbereich: Trinkwasser Range of application: Drinking Water				
Nennweite Size DN	Nenndruck Pressure rating PN	Wasser-Prüfdruck in bar Hydrost. test pressure in bar Gehäuse / Body	 Sitz / Seat	Zulässiger Betriebsdruck in bar Admissible working pressure in bar bis 80°C / up to 80°C
15-25	10, 16	15, 24	11, 17,6	10, 16

Im Auftragsfall bitte Betriebsverhältnisse angeben.

In case of order please specify the working conditions

Werkstoffe / Zubehör, Materials / Equipment		
Katalog-Nr. / Catalogue No.		**11-SC1F-0001**
Gehäuse	Body	EN GJS 500-7 / EN GJS 500-7
Sitz	Seat	EPDM / EPDM
Stift	Pin	Edelstahl V2A-SS-304 / Stainless Steel A2-SS304
Haube	Bonnet	EN GJS 500-7 / EN GJS 500-7
Kleine Düse	Small Nozzle	Edelstahl V2A-SS-304 / Stainless Steel A2-SS304
Sechskantschraube	Hex bolt	Edelstahl V2A-SS-304 / Stainless Steel A2-SS304
Unterlegscheibe	washer	Edelstahl V2A-SS-304 / Stainless Steel A2-SS304
O-Ring	o-ring	NBR / NBR
Stützplatte	support plate	Edelstahl V2A-SS-304 / Stainless Steel A2-SS304
Sechskantschwimmer	Hex float	Edelstahl V2A-SS-304 / Stainless Steel A2-SS304
Schwebekörper	Float	Edelstahl V2A-SS-304 / Stainless Steel A2-SS304

Nenn- Size	Maße Dimmensions		
DN mm	A mm	C mm	H mm
15	G 1/2	20	152
20	G 3/4"	20	152
25	G1"	20	152

Technische Änderungen vorbehalten

We reserve the right to make technical modifications

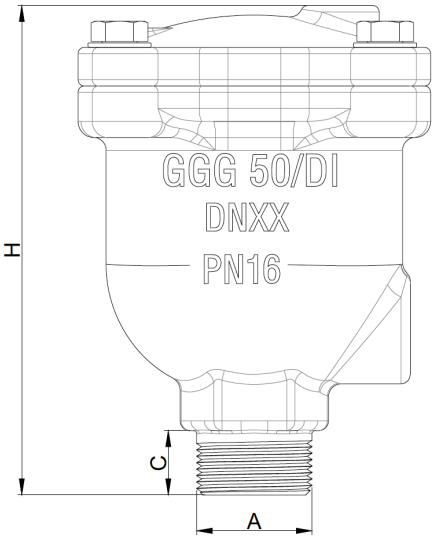

10.06.2022 - 11-SC1F-0001

CTV Armaturen & Penstocks GmbH, Pliniusstrasse 6, 48488 Emsbüren, Deutschland
Tel: +49 (0)5903 217 6866, Email: info@ctv-valves.com

WRAS APPROVED PRODUCT
DIN DVGW CERT
ISO 9001:2015
ISO 3834

CTV Armaturen & Penstocks GmbH

Modell 11-SC3F: Entlüftungsventil mit Dreifachfunktion

aus Gusseisen mit Kugelgraphit GGG - PN10 - PN16

Type 11-SC3F: Triple Function Air Release Valve

of ductile cast iron GGG - PN10 - PN16

DN50 - DN300

CTV Armaturen & Penstocks GmbH, Pliniusstrasse 6, 48488 Emsbüren, Deutschland
Tel: +49 (0)5903 217 6866, Email: info@ctv-valves.com

Entlüftungsventil mit Dreifachfunktion

Triple Function Air Release Valve

CTV Armaturen & Penstocks GmbH

Verwendungsbereich: sauberes Wasser Range of application: clean water				
Nennweite Size DN	Nenndruck Pressure rating PN	Wasser-Prüfdruck in bar Hydrost. test pressure in bar Gehäuse / Body	 Sitz / Seat	Zulässiger Betriebsdruck in bar Admissible working pressure in bar bis 80°C / up to 80°C
50-300	10, 16	15, 24	11, 17.6	10, 16

Im Auftragsfall bitte Betriebsverhältnisse angeben.

In case of order please specify the working conditions

Werkstoffe / Zubehör, Materials / Equipment		
Katalog-Nr. / Catalogue No.		**11-SC3F-002**
Gehäuse	Body	Gusseisen mit Kugelgraphit / Ductile Iron (EN GJS 500-7)
Schwimmkörper	Float	Edelstahl / Stainless Steel (AISI 304)
Dichtungsbogen	Sealing Arc	Carbonstahl / Carbon steel (AISI 304)
Haube	Bonnet	Gusseisen mit Kugelgraphit / Ductile Iron (EN GJS 500-7)
Deckel	Cover	Carbonstahl / Carbon steel (AISI 304)
Sieb	Screen	Edelstahl / Stainless Steel (AISI 304)
Säule	Pillar	Aluminium / Aluminium
Düsensitz	Nozzle Seat	Gummi NBR oder EPDM / rubber NBR or EPDM
Dämpfer	Buffer	Gummi NBR oder EPDM / rubber NBR or EPDM

Nenn- Size	Maße Dimensions								
DN	B		D		K		H	N-d	
mm	PN10	PN16	PN10	PN16	PN10	PN16		PN10	PN16
50	99	99	165	165	125	125	280	4 -19	4 -19
65	118	118	185	185	145	145	284	4 -19	4 -19
80	132	132	200	200	160	160	362	8 -19	8 -19
100	156	156	220	220	180	180	395	8 -19	8 -19
150	211	211	285	285	240	240	485	8 -23	8 -23
200	266	266	340	340	295	295	582	8 -23	12 -23
250	319	319	405	405	350	355	602	12 -23	12 -28
300	370	370	460	460	400	410	750	12 -23	12 -28

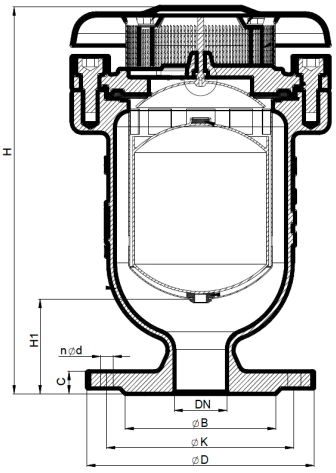

Technische Änderungen vorbehalten

We reserve the right to make technical modifications

26.07.2022 - 11-SC3F-002

CTV Armaturen & Penstocks GmbH, Pliniusstrasse 6, 48488 Emsbüren, Deutschland
Tel: +49 (0)5903 217 6866, Email: info@ctv-valves.com

WRAS APPROVED PRODUCT · DIN DVGW CERT · ISO 9001:2015 · ISO 3834

CTV Armaturen & Penstocks GmbH

Modell 11-SC3F-T: Dreifachfunktions-Belüftungsventil mit Gewinde

aus Gusseisen mit Kugelgraphit GGG - PN10 - PN16

Type 11-SC3F-T: Threaded Triple Function Air Release Valve

of ductile cast iron GGG - PN10 - PN16

DN25 - DN50

CTV Armaturen & Penstocks GmbH, Pliniusstrasse 6, 48488 Emsbüren, Deutschland
Tel: +49 (0)5903 217 6866, Email: info@ctv-valves.com

Dreifachfunktions-Belüftungsventil mit Gewinde

Threaded Triple Function Air Release Valve

CTV Armaturen & Penstocks GmbH

Verwendungsbereich: sauberes Wasser Range of application: clean water				
Nennweite Size DN	Nenndruck Pressure rating PN	Wasser-Prüfdruck in bar Hydrost. test pressure in bar Gehäuse / Body	 Sitz / Seat	Zulässiger Betriebsdruck in bar Admissible working pressure in bar bis 80°C / up to 80°C
25 - 50	10, 16	15, 24	11, 17,6	10, 16

Im Auftragsfall bitte Betriebsverhältnisse angeben.

In case of order please specify the working conditions

Werkstoffe / Zubehör, Materials / Equipment		
Katalog-Nr. / Catalogue No.		**11-SC3F-T-0003**
Gehäuse	Body	Gusseisen mit Kugelgraphit / Ductile Iron (EN GJS 500-7)
Schwimmkörper	Float	Edelstahl / Stainless Steel (AISI 304)
Deckel	Cover	Carbonstahl / Carbon steel Epoxy Coated
Sitz	Seat	Gummi NBR oder EPDM / rubber NBR or EPDM
Haube	Bonnet	Gusseisen mit Kugelgraphit / Ductile Iron (EN GJS 500-7)
O-Ring	O-ring	Gummi NBR oder EPDM / rubber NBR or EPDM
Beschichtung	Coating	Epoxidbeschichtung RAL 5015 min 250-300 µm / Epoxy Coating RAL 5015 min 250-300 µm

Nenn- Size	Maße Dimmensions		
DN mm	A mm	C mm	H mm
25	G1"	20	243
32	G1 1/4"	20	243
40	G1 1/2"	20	243
50	G2"	20	243

Technische Änderungen vorbehalten

We reserve the right to make technical modifications

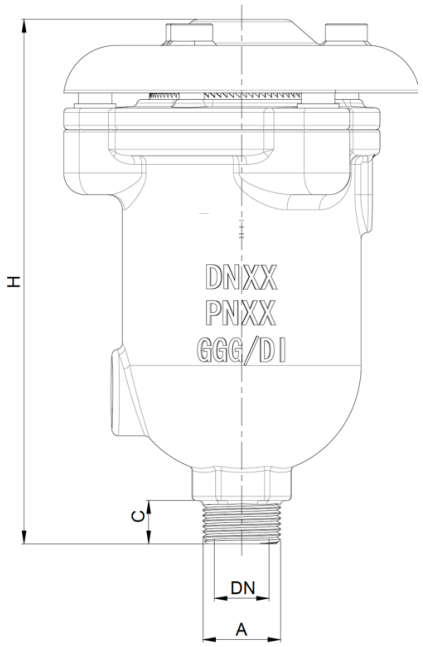

24.06.2022 - 11-SC3F-T-0003

CTV Armaturen & Penstocks GmbH

Modell 11-DC3F: Doppelkugel Entlüftungsventil

Dreifachfunktion
DesignnachDIN3352
ausGusseisenmitKugelgraphitGGG - PN16

Type 11-DC3F: Double ball air release valve

triple function
Designacc.toDIN3352
of ductile cast iron GGG - PN16

DN50-DN400

CTV Armaturen & Penstocks GmbH, Pliniusstrasse 6, 48488 Emsbüren, Deutschland
Tel: +49 (0)5903 217 6866, Email: info@ctv-valves.com

Doppelkugel Be- und Entlüftungsventil

Double ball air release valve

CTV Armaturen & Penstocks GmbH

Verwendungsbereich: Abwasser und Trinkwasser. Alle Medienberührende Teile nach UBA-KTW und DVGW W270 Range of application: Sewage and Drinking Water. All contact parts according to UBA-KTW and DVGW W270				
Nennweite Size DN	Nenndruck Pressure rating PN	Wasser-Prüfdruck in bar Hydrost. test pressure in bar Gehäuse / Body	 Sitz / Seat	Zulässiger Betriebsdruck in bar Admissible working pressure in bar bis 80°C / up to 80°C
50 - 400	16	24	17.6	16

Im Auftragsfall bitte Betriebsverhältnisse angeben.

In case of order please specify the working conditions

Werkstoffe / Zubehör, Materials / Equipment		
Katalog-Nr. / Catalogue No.		**11-DC3F-0004**
Gehäuse	Body	GGG 50 / GGG 50
Ventilhaube	Bonnet	GGG 50 / GGG 50
Kugel	Ball	Edelstahl V2A-SS-304 / Stainless Steel A2-SS304
Schrauben	Bolts	Edelstahl A2 / Stainless Steel A2
Muttern	Nuts	Edelstahl A2 / Stainless Steel A2
Beschichtung	Coating	Epoxidbeschichtung RAL 5015 min 250-300 µm / Epoxy Coating RAL 5015 min 250-300 µm

Nenn- Size	Maße Dimmensions				Gewicht weight
DN mm	D mm	K mm	P mm	H mm	kg
50	165	125	99	230	24,0
65	185	145	118	230	26,0
80	200	160	132	275	34,0
100	220	180	156	285	36,0
125	auf Nachfrage / on request				58,0
150	285	240	211	350	68,0
200	340	295	266	450	117,0
250	405	355	319	510	155,0
300	460	410	370	540	195,0
350	auf Nachfrage / on request				298,0
400	auf Nachfrage / on request				385,0

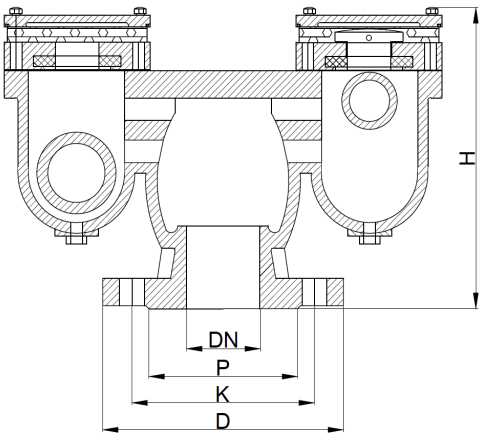

Technische Änderungen vorbehalten

We reserve the right to make technical modifications

07.06.202211-DC3F-0004

CTV Armaturen & Penstocks GmbH, Pliniusstrasse 6, 48488 Emsbüren, Deutschland
Tel: +49 (0)5903 217 6866, Email: info@ctv-valves.com

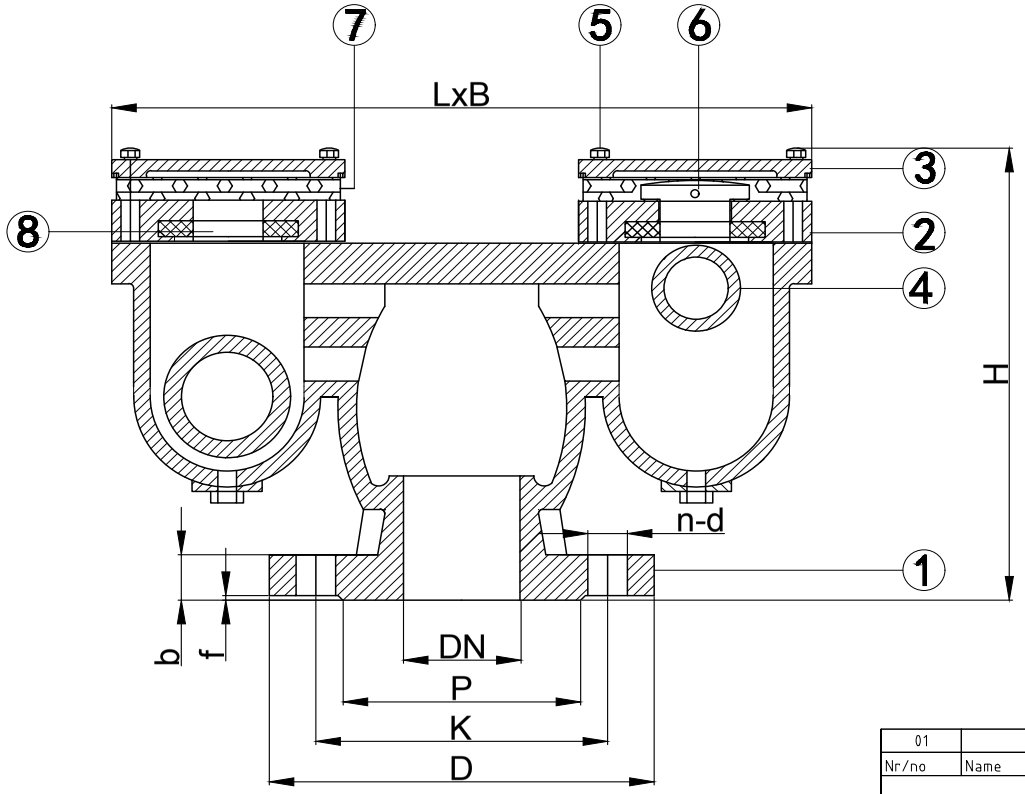

DN	D	K	P	b	f	n-d	H	L x B
50	165	125	99	19	3	4 - 19	230	300x100
65	185	145	118	19	3	4 - 19	230	300x100
80	200	160	132	19	3	8 - 19	275	370x125
100	220	180	156	19	3	8 - 19	285	380x125
150	285	240	211	19	3	8 - 23	350	450x150
200	340	295	266	20	3	12 - 23	450	600x200
250	405	355	319	22	3	12 - 28	510	730x220
300	460	410	370	24,5	4	12 - 28	540	760x220

Technical requirements / Technische Anforderungen

1. *Design acc to.* / Design nach AWWA C 512 / DIN3352
2. *Flange to* / Flansch nach EN1092-2
3. *testing stadard to* / Prüfstandard nach EN12266
4. *working temperature* / Betriebstemperatur: -20° - 80°C

S.N.	*name /*	Bezeichnung	material
8	*Gasket*	Dichtung	EPDM
7	*Exhaust gas network*	Abgasnetz	SS304
6	*Air vent*	Entlüftung	BRASS
5	*Bolt*	Schraube	A2-70
4	*Sealing Ball*	Dichtung Kugel	SS304
3	*Cover plate*	Abdeckplatte	SS420
2	*Bonnet*	Ventilhaube	GGG50
1	*Body*	Gehäuse	GGG50

Nr/no	Name	Tag/day	Änderung/revision
01			

CTV Armaturen & Penstocks GmbH
Pliniusstraße 6, 48488 Emsbueren

Werkstoff	see BOOM	
	Name	Tag/day
Gezeichnet/drawn	Alina Arndt	09.06.2022
Geprüft/Checked By	Nabeel kekheya	

Baulängen n. DIN EN 558/
face-to-face dim. acc. to DIN EN 558

(Änderungen vorbehalten / Subject to change)

Maßstab / Scale: ./.

Double ball air release valve.
Triple Function
PN16

drawing number:
11-DC3F-0001.pdf

Format/size: DIN A3

Modell 11-DC2F: Entlüftungsventil mit zwei Kugeln - Doppelfunktion

aus Gusseisen mit Kugelgraphit GGG - PN10 - PN16

CTV Armaturen & Penstocks GmbH

Type 11-DC2F: Air Valve Double chamber double function

of ductile cast iron GGG - PN10 - PN16

DN50 - DN200

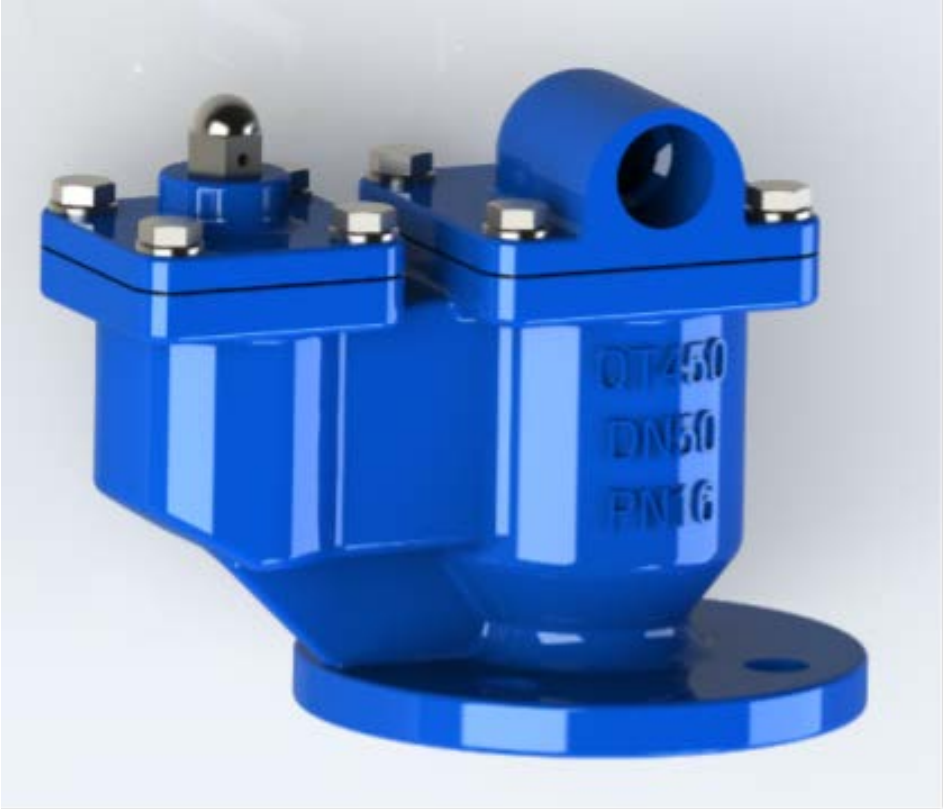

CTV Armaturen & Penstocks GmbH, Pliniusstrasse 6, 48488 Emsbüren, Deutschland
Tel: +49 (0)5903 217 6866, Email: info@ctv-valves.com

Entlüftungsventil

Air Valve

CTV Armaturen & Penstocks GmbH

Verwendungsbereich: sauberes Wasser Range of application: clean water				
Nennweite Size DN	Nenndruck Pressure rating PN	Wasser-Prüfdruck in bar Hydrost. test pressure in bar Gehäuse / Body	Sitz / Seat	Zulässiger Betriebsdruck in bar Admissible working pressure in bar bis 80°C / up to 80°C
50-200	10, 16	15, 24	11, 17.6	10, 16

Im Auftragsfall bitte Betriebsverhältnisse angeben.

In case of order please specify the working conditions

Werkstoffe / Zubehör, Materials / Equipment		
Katalog-Nr. / Catalogue No.		**11-DC2F-005**
Gehäuse	Body	Gusseisen mit Kugelgraphit / Ductile Iron (EN GJS 500-7)
Kugel	Ball	Edelstahl / Stainless Steel (AISI 304+ABS/SS304)
Gummidichtung	Rubber gasket	EPDM / EPDM
O-Ring	O-ring	EPDM / EPDM
Dichtung	Gasket	Edelstahl / Stainless Steel (AISI 304)
Schraube	Bolt	Edelstahl / Stainless Steel (AISI 304)
Haube	Bonnet	Gusseisen mit Kugelgraphit / Ductile Iron (EN GJS 500-7)
Blug	Blug	Edelstahl / Stainless Steel (AISI 304)

Nenn-	Maße							
Size	Dimmensions							
DN	D		G	A	W	H	N-d	
mm	PN10	PN16	PN10				PN10	PN16
50	165	165	102	3	241	188	4 -19	4 -19
65	185	185	122	3	267	192	4 -19	4 -19
80	200	200	138	3	295	220	8 -19	8 -19
100	220	220	158	3	327	235	8 -19	8 -19
150	285	285	212	3	446	354	8 -23	8 -23
200	340	340	268	3	573	440	8 -23	12 -23

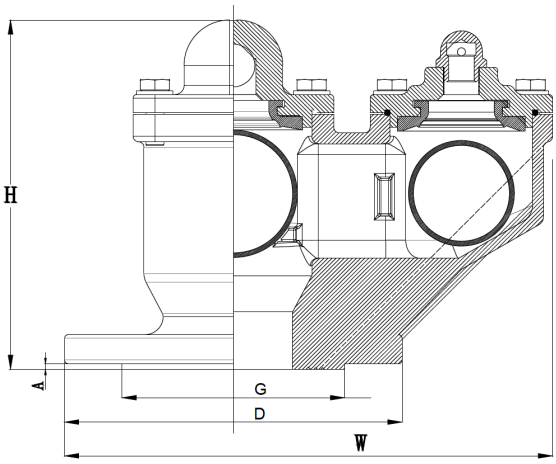

Technische Änderungen vorbehalten

We reserve the right to make technical modifications

23.09.2022 - 11-DC2F-005

CTV Armaturen & Penstocks GmbH, Pliniusstrasse 6, 48488 Emsbüren, Deutschland
Tel: +49 (0)5903 217 6866, Email: info@ctv-valves.com

CTV Armaturen & Penstocks GmbH

Modell 11-SEW3F: Dreifachfunktions - Abwasser Entlüftungsventil

Design nach DIN3352 - PN10, PN16
aus Gusseisen mit Kugelgraphit GGG

Type 11-SEW3F: Triple Function Sewage Air Release Valve

Design acc. to DIN3352 - PN10, PN16
of ductile cast iron GGG

DN 50 - DN 300

CTV Armaturen & Penstocks GmbH, Pliniusstrasse 6, 48488 Emsbüren, Deutschland
Tel: +49 (0)5903 217 6866, Email: info@ctv-valves.com

Dreifachfunktions - Abwasser Entlüftungsventil

Triple Function Sewage Air release valve

CTV Armaturen & Penstocks GmbH

Verwendungsbereich: Abwasser und Trinkwasser. Alle Medienberührende Teile nach UBA-KTW und DVGW W270 Range of application: Sewage and Drinking Water. All contact parts according to UBA-KTW and DVGW W270				
Nennweite Size DN	Nenndruck Pressure rating PN	Wasser-Prüfdruck in bar Hydrost. test pressure in bar Gehäuse / Body	 Sitz / Seat	Zulässiger Betriebsdruck in bar Admissible working pressure in bar bis 80°C / up to 80°C
50 - 300	10, 16	15, 24	11, 17.6	10, 16

Im Auftragsfall bitte Betriebsverhältnisse angeben.

In case of order please specify the working conditions

Werkstoffe / Zubehör, Materials / Equipment		
Katalog-Nr. / Catalogue No.		**11-SEW3F-006**
Gehäuse	Body	Gusseisen mit Kugelgraphit / Ductile Iron (GJS 500-7)
Schwimmkörper	Float	Edelstahl / Stainless Steel (AISI 316L)
Mittelteil	Middle Part	Gusseisen mit Kugelgraphit / Ductile Iron (GJS 500-7)
O-Ring	O-Ring	Gummi NBR / rubber NBR
Sechskantschraube	Hex Bolt	Edelstahl / Stainless Steel (AISI 316)
Unterlegscheibe	Washer	Edelstahl / Stainless Steel (AISI 316)
Haube	Bonnet	Gusseisen mit Kugelgraphit / Ductile Iron (GJS 500-7)
Deckel	Cover	Gusseisen mit Kugelgraphit / Ductile Iron (GJS 500-7)
Ringschraube	Eyebolt	Carbonstahl / Carbon Steel (AISI 316)
Säule	Pillar	Aluminium / Aluminium
Sitz	Seat	Gummi NBR / rubber NBR
Dichtungsbogen	Sealing Arc	Edelstahl / Stainless Steel (AISI 316)
Blende Sitz	Orifice Seat	Gummi NBR / rubber NBR
Spindel	Stem	Edelstahl / Stainless Steel (AISI 316)
Stopfen-Option	Plug-Option	Edelstahl / Stainless Steel (AISI 316)
Kleine Düse	Small Orifice	Edelstahl / Stainless Steel (AISI 316)

Größen ≥ DN150 haben keine Säule

Size ≥ DN150 have no pillar

Nenn- Size	Maße Dimmensions						
DN	H	D	K	B	n-d		C
mm	mm	mm	mm	mm	PN10	PN16	mm
50	558	165	125	99	4-Ø19	4-Ø19	19
80	653	200	160	132	8-Ø19	8-Ø19	19
100	676	220	180	156	8-Ø19	8-Ø19	19
150	810	285	240	211	8-Ø23	8-Ø23	19
200	950	340	295	266	8-Ø23	12-Ø23	20
300	1173	460	410	370	12-Ø23	12-Ø28	24,5

Technische Änderungen vorbehalten

We reserve the right to make technical modifications

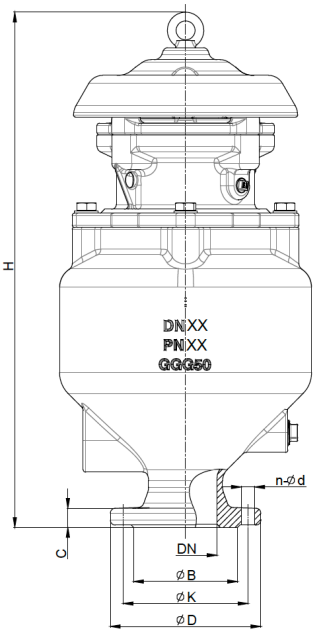

25.07.2022 - 11-SEW3F-0006

Plunger / Needle Valves

13

CTV Armaturen & Penstocks GmbH

Modell 13: Ringkolbenventil

aus Gusseisen mit Kugelgraphit nach EN-GJS-400-15

Baulänge nach EN558-1 Serie 15 - PN10, PN16

Type 13: Plunger Valve

of ductile cast iron acc. to EN-GJS-400-15

face to face EN558-1 series 15 - PN10, PN16

DN 150 - 1200

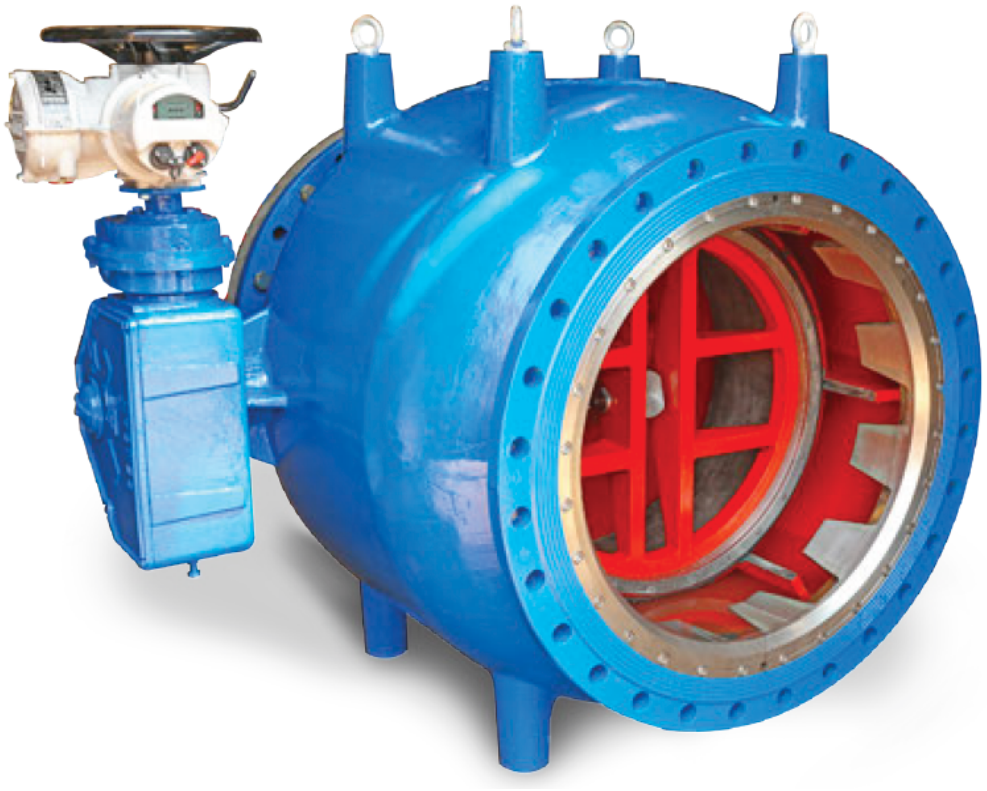

CTV Armaturen & Penstocks GmbH, Pliniusstrasse 6, 48488 Emsbüren, Deutschland
Tel: +49 (0)5903 217 6866, Email: info@ctv-valves.com

WRAS APPROVED PRODUCT
DIN DVGW CERT
ISO 9001:2015
ISO 3834

Ringkolbenventil
Plunger Valve

CTV Armaturen & Penstocks GmbH

Verwendungsbereich: Abwasser Range of application: Storm water			
Nennweite Size DN	Nenndruck Pressure rating PN	Wasser-Prüfdruck in bar Hydrost. test pressure in bar Gehäuse / Body	Zulässiger Betriebsdruck in bar Admissible working pressure in bar bis 50°C / up to 50°C
150 - 1200	10, 16	15, 24	10, 16

Im Auftragsfall bitte Betriebsverhältnisse angeben.
In case of order please specify the working conditions

Werkstoffe / Zubehör, Materials / Equipment		
Katalog-Nr. / Catalogue No.		**13-PN10,16-0001**
Gehäuse	Body	GGG nach EN-GJS-400-15 / GGG acc. to EN-GJS-400-15
Kolbenanschlussteil	Piston Connection Part	GGG nach EN-GJS-400-15 / GGG acc. to EN-GJS-400-15
hinterer Deckel	Back Lid	GGG nach EN-GJS-400-15 / GGG acc. to EN-GJS-400-15
Kolben	Crank	GGG nach EN-GJS-400-15 / GGG acc. to EN-GJS-400-15
Verbindung	Connecting	AISI 304 Edelstahl / AISI 304 Stainless Steel
Ventilwelle	Valve Shaft	AISI 420 Edelstahl / AISI 420 Stainless Steel
Dichtungsring Flange	Sealing Ring Flange	AISI 304 Edelstahl / AISI 304 Stainless Steel
Dichtungsring	Sealing Ring	EPDM / EPDM
Kolbenlager	Crank Bearings	BRONZE G-CU Sn12 / BRONZ G-CU Sn12
Verbindungsbolzen	Connection Pins	AISI 420 Edelstahl / AISI 420 Stainless Steel
Lagerdeckel	Pins Bearing Cap	AISI 420 Edelstahl / AISI 420 Stainless Steel
Wellenlager	Shaft Bearings	BRONZE G-CU Sn12 / BRONZ G-CU Sn12
Flaschschrauben	Flange Bolts	A2-Edelstahl / A2 Stainless Steel
Schrauben	Back lid Bolts	A2-Edelstahl / A2 Stainless Steel
Stiftschrauben	Pin Bolts	A2-Edelstahl / A2 Stainless Steel
Kolbendichring	Piston Sealing Rings	EPDM / EPDM
Wellenlager	Shaft Bearings	BRONZE G-CU Sn12 / BRONZ G-CU Sn12
Wellendichring	Shaft Sealing Rings	EPDM / EPDM
Kolben	Piston	AISI 304 Edelstahl / AISI 304 Stainless Steel

Nenn-weite Size	Maße Dimmensions									Gewicht weight
DN	A	B	L	D		K		n - d2	b	(Kg)
				PN10	PN16	PN10	PN16			
150	283	143	350	285	285	240	240	8 - 23	19,0	80
200	315	170	400	340	340	295	295	5 - 23	20,0	115
250	375	200	450	400	400	350	355	12 - 23	22,0	155
300	455	228	500	455	455	400	410	12 - 23	24,5	190
400	535	290	600	565	580	515	525	16 - 28	24,5	335
500	602	360	750	670	715	620	650	20 - 28	26,5	590
600	660	435	900	780	840	725	770	20 - 31	30,0	1030
700	720	515	1050	895	910	840	840	24 - 31	32,5	1620
800	770	565	1200	1015	1025	950	950	24 - 34	35,0	2050
900	830	630	1350	1115	1125	1050	1050	28 - 34	37,5	2750
1000	915	695	1500	1230	1255	1160	1170	28 - 37	40,0	4000
1200	1070	825	1800	1455	1485	1380	1390	32 - 40	45,0	5300

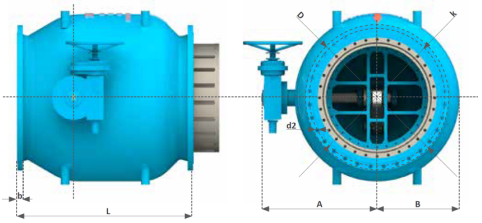

Technische Änderungen vorbehalten
We reserve the right to make technical modifications

21.01.2022 - 13-PN10,16-0001

CTV Armaturen & Penstocks GmbH, Pliniusstrasse 6, 48488 Emsbüren, Deutschland
Tel: +49 (0)5903 217 6866, Email: info@ctv-valves.com

WRAS APPROVED PRODUCT · DIN DVGW CERT · ISO 9001:2015 · ISO 3834

CTV Armaturen & Penstocks GmbH

Modell 13: Ringkolbenventil

aus Gusseisen mit Kugelgraphit nach EN-GJS-400-15

Baulänge nach EN558-1 Serie 15 - PN25

Type 13: Plunger Valve

of ductile cast iron acc. to EN-GJS-400-15

face to face EN558-1 series 15 - PN25

DN 65 - DN 1400

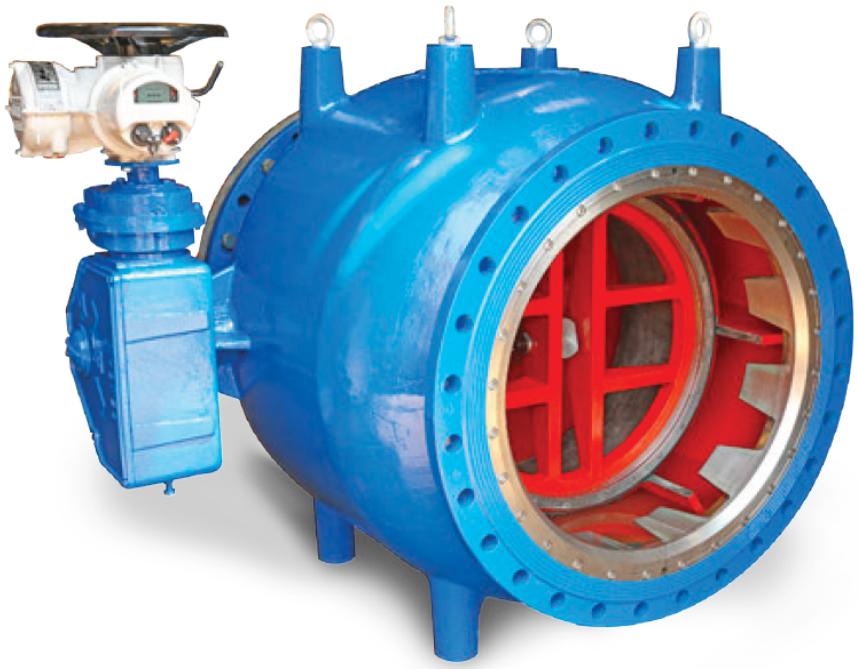

CTV Armaturen & Penstocks GmbH, Pliniusstrasse 6, 48488 Emsbüren, Deutschland
Tel: +49 (0)5903 217 6866, Email: info@ctv-valves.com

WRAS APPROVED PRODUCT
DIN DVGW CERT
ISO 9001:2015
ISO 3834

Ringkolbenventil
Plunger Valve

CTV Armaturen & Penstocks GmbH

Verwendungsbereich: Abwasser Range of application: Storm water			
Nennweite Size DN	Nenndruck Pressure rating PN	Wasser-Prüfdruck in bar Hydrost. test pressure in bar Gehäuse / Body	Zulässiger Betriebsdruck in bar Admissible working pressure in bar bis 50°C / up to 50°C
65 - 1400	25	37,5	25

Im Auftragsfall bitte Betriebsverhältnisse angeben.
In case of order please specify the working conditions

Werkstoffe / Zubehör, Materials / Equipment		
Katalog-Nr. / Catalogue No.		**13-PN25-0002**
Gehäuse	Body	GGG nach EN-GJS-400-15 / GGG acc. to EN-GJS-400-15
Kolbenanschlussteil	Piston Connection Part	GGG nach EN-GJS-400-15 / GGG acc. to EN-GJS-400-15
hinterer Deckel	Back Lid	GGG nach EN-GJS-400-15 / GGG acc. to EN-GJS-400-15
Kolben	Crank	GGG nach EN-GJS-400-15 / GGG acc. to EN-GJS-400-15
Verbindung	Connecting	AISI 304 Edelstahl / AISI 304 Stainless Steel
Ventilwelle	Valve Shaft	AISI 420 Edelstahl / AISI 420 Stainless Steel
Dichtungsring Flange	Sealing Ring Flange	AISI 304 Edelstahl / AISI 304 Stainless Steel
Dichtungsring	Sealing Ring	EPDM / EPDM
Kolbenlager	Crank Bearings	BRONZE G-CU Sn12 / BRONZ G-CU Sn12
Verbindungsbolzen	Connection Pins	AISI 420 Edelstahl / AISI 420 Stainless Steel
Lagerdeckel	Pins Bearing Cap	AISI 420 Edelstahl / AISI 420 Stainless Steel
Wellenlager	Shaft Bearings	BRONZE G-CU Sn12 / BRONZ G-CU Sn12
Flaschschrauben	Flange Bolts	A2-Edelstahl / A2 Stainless Steel
Schrauben	Back lid Bolts	A2-Edelstahl / A2 Stainless Steel
Stiftschrauben	Pin Bolts	A2-Edelstahl / A2 Stainless Steel
Kolbendichring	Piston Sealing Rings	EPDM / EPDM
Wellenlager	Shaft Bearings	BRONZE G-CU Sn12 / BRONZ G-CU Sn12
Wellendichring	Shaft Sealing Rings	EPDM / EPDM
Kolben	Piston	AISI 304 Edelstahl / AISI 304 Stainless Steel

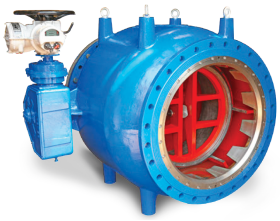

Nenn-weite	Maße								Gewicht
Size	Dimmensions								weight
DN	PN	A	B	L	D	K	n - d2	b	(Kg)
65	25	200	95	265	185	145	8 - 19	19,0	30
80	25	210	100	280	200	160	8 - 19	19,0	35
100	25	221	110	300	235	190	8 - 23	19,0	42
150	25	283	143	350	300	250	8 - 28	20,0	80
200	25	315	170	400	360	310	12 - 28	22,0	115
300	25	455	228	500	485	430	16 - 31	27,5	200
400	25	535	290	600	620	550	16 - 37	32,0	350
500	25	602	360	750	730	660	20 - 37	36,5	620
600	25	660	435	900	845	770	20 - 40	42,0	1110
700	25	720	515	1050	960	875	24 - 43	46,5	1750
800	25	770	565	1200	1085	990	24 - 49	51,0	2230
900	25	830	630	1350	1185	1090	28 - 49	59,5	on request
1000	25	915	695	1500	1320	1210	28 - 56	60,0	on request
1200	25	1070	825	1800	1530	1420	32 - 56	74,0	on request
1400	25	1260	1050	2100	1755	1640	36 - 62	76,0	on request

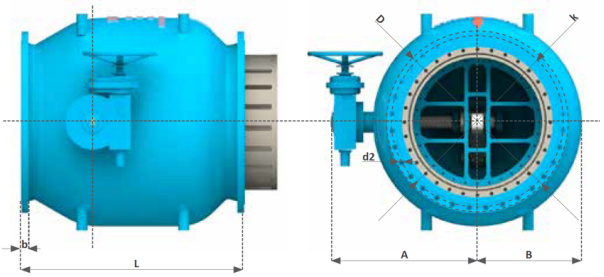

Technische Änderungen vorbehalten
We reserve the right to make technical modifications

18.07.2022 - 13-PN25-0002

CTV Armaturen & Penstocks GmbH, Pliniusstrasse 6, 48488 Emsbüren, Deutschland
Tel: +49 (0)5903 217 6866, Email: info@ctv-valves.com

WRAS APPROVED PRODUCT · DIN DVGW CERT · ISO 9001:2015 · ISO 3834

CTV Armaturen & Penstocks GmbH

Modell 14: Y-Type Schmutzfänger

Design nach DIN3202-F1
Baulänge nach DIN EN 558-1 Series: 1
aus Gusseisen mit Kugelgraphit nach EN-GJS-400-15; PN10, PN16

Type 14: Y-Type Strainers

Design acc. to DIN 3202-F1
face to face length acc. to DIN EN 558-1 Series: 1
of ductile cast iron acc. to EN-GJS-400-15; PN10, PN16

DN 50 - DN 600

Y-Type Schmutzfänger
Y-Type Strainers

CTV Armaturen & Penstocks GmbH

Verwendungsbereich: Wasser und Abwasser				
Range of application: Potable water and waste water				
Nennweite	Nenndruck	Wasser-Prüfdruck in bar		Zulässiger Betriebsdruck in bar
Size	Pressure rating	Hydrost. test pressure in bar		Admissible working pressure in bar
DN	PN	Gehäuse / Body	Sitz / Seat	bis 80°C / up to 80°C 1)
50 - 600	10 - 16	15 - 24	11 - 17,6	10 - 16

Im Auftragsfall bitte Betriebsverhältnisse angeb 1) Andere Betriebstemperaturen auf Anfrage möglich

In case of order please specify the working conditic Other working temperatures possible on request

Werkstoffe / Zubehör, Materials / Equipment		
Katalog-Nr. / Catalogue No.		**14-DN50-DN600-0001**
Ventildeckel	Bonnet	GGG 50 / GGG 50
Gehäuse	Body	GGG 50 / GGG 50
Sieb	Screen	Edelstahl V2A-SS-304 / Stainless Steel A2-SS304
Dichtung der Ven	Bonnet gasket	EPDM oder NBR / EPDM or NBR
Ablassschraube	Drainplug	Edelstahl V2A-SS-304 / Stainless Steel A2-SS304
Schraube	bolt	Kohlenstoffstahl / Carbon Steel

Nenn-weite Size	Baulänge face to face	Maße Dimmensions							
DN	L	D	Q	D1		D2		nxØd	
mm	mm	mm	mm	PN10	PN16	PN10	PN16	PN10	PN16
50	230	165	140	125	125	102	102	4 - Ø19	4 - Ø19
65	290	185	153	145	145	122	122	4 - Ø19	4 - Ø19
80	310	200	178	160	160	138	138	8 - Ø19	8 - Ø19
100	350	220	196	180	180	158	158	8 - Ø19	8 - Ø19
125	400	250	240	210	210	188	188	8 - Ø19	8 - Ø19
150	480	285	287	240	240	212	212	8 - Ø23	8 - Ø23
200	600	340	357	295	295	268	268	8 - Ø23	12 - Ø23
250	730	405	452	350	355	320	320	12 - Ø23	12 - Ø27
300	850	460	520	400	410	370	378	12 - Ø23	12 - Ø27
350	980	520	613	460	470	430	438	16 - Ø23	16 - Ø28
400	1100	580	691	515	525	480	487	16 - Ø28	16 - Ø31
450	1200	640	765	565	585	540	580	20 - Ø28	20 - Ø31
500	1250	715	850	620	650	580	610	20 - Ø28	20 - Ø34
600	1450	840	986	725	770	690	727	20 - Ø31	20 - Ø37

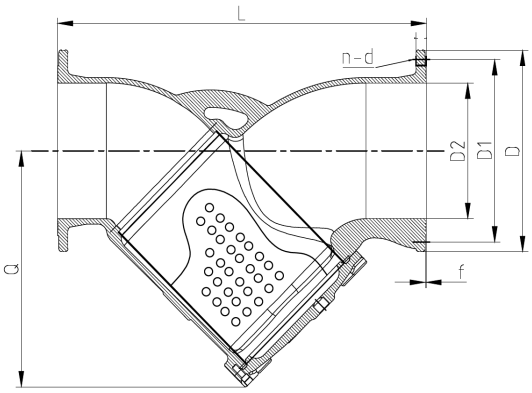

Technische Änderungen vorbehalten;

We reserve the right to make technical modifications;

18.07.2022 - 14-DN50-DN600-0001

CTV Armaturen & Penstocks GmbH, Pliniusstrasse 6, 48488 Emsbüren, Deutschland
Tel: +49 (0)5903 217 6866, Email: info@ctv-valves.com

Dismantling Joints

43

CTV Armaturen & Penstocks GmbH

Modell 43: Ausbaustück

aus Gusseisen mit Kugelgraphit nach EN-GJS-400-15 - PN 10, 16

Type 43: Dismantling Joints

of ductile cast iron acc. to EN-GJS-400-15 - PN 10, 16

DN 50 - DN 1600

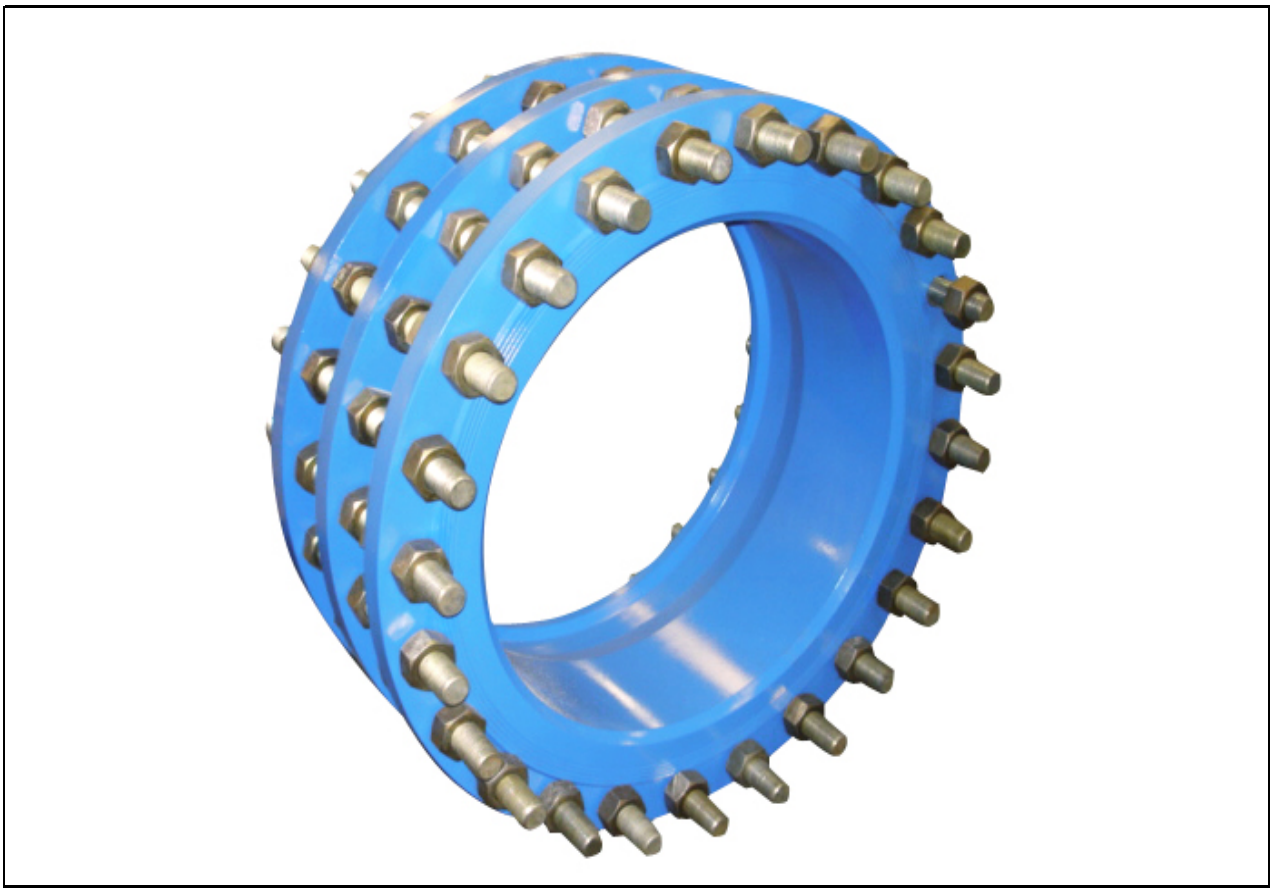

CTV Armaturen & Penstocks GmbH, Pliniusstrasse 6, 48488 Emsbüren, Deutschland
Tel: +49 (0)5903 217 6866, Email: info@ctv-valves.com

Ausbaustück
Dismantling Joint

CTV Armaturen & Penstocks GmbH

Verwendungsbereich: Abwasser Range of application: Storm water			
Nennweite	Nenndruck	Wasser-Prüfdruck in bar	Zulässiger Betriebsdruck in bar
Size	Pressure rating	Hydrost. test pressure in bar	Admissible working pressure in bar
DN	PN	Gehäuse / Body	bis 80°C / up to 80°C
50 - 1600	10, 16	15, 24	10, 16

Im Auftragsfall bitte Betriebsverhältnisse angeben.
In case of order please specify the working conditions

Werkstoffe / Zubehör, Materials / Equipment	
Katalog-Nr. / Catalogue No.	**43-PN10/PN16-0001**
Gehäuse / Body	GGG 40 nach EN-GJS-400-15 / GGG 40 acc. to EN-GJS-400-15
Sicherungsring / retainer	GGG 40 nach EN-GJS-400-15 / GGG 40 acc. to EN-GJS-400-15
Dichtung / Seals	EPDM / EPDM
Stehbolzen / studs	verzinkter Stahl St37 / galvanized steel St37
Mutter / nuts	verzinkter Stahl 8.8 / galvanized steel 8.8
Oberflächenschutz / Corrosion protection	Epoxy-pulverbeschichtet 250µ / epoxy powder coated 250µ

Nenn-weite	Maße										
Size	Dimmensions										
DN	D2	D4		D5		L1	L2		d		N
		PN10	PN16	PN10	PN16		PN10	PN16	PN10	PN16	
50	62	125	125	165	165	180	320	320	16	16	4
65	78	145	145	185	185	180	320	320	16	16	4
80	98	160	160	200	200	200	340	340	16	16	8
100	118	180	180	220	220	200	340	340	16	16	8
125	144	210	210	250	250	200	340	340	16	16	8
150	170	240	240	285	285	200	340	340	20	20	8
200	222	295	295	340	340	220	350	350	20	20	12
250	274	350	355	400	400	230	370	380	20	24	12
300	326	400	410	455	455	230	390	400	20	24	12
350	378	460	470	505	520	250	400	410	20	24	16
400	429	515	525	565	580	260	420	430	24	27	16
450	480	565	585	615	640	270	435	450	24	27	20
500	532	620	650	670	715	280	440	460	24	30	20
600	635	725	770	780	840	300	460	500	27	33	20
700	738	840	840	895	910	300	480	500	27	33	24
800	842	950	950	1015	1025	320	500	530	30	36	24
900	945	1050	1050	1115	1125	320	500	530	30	36	28
1000	1048	1160	1170	1230	1255	340	545	570	33	39	28
1200	1255	1380	1390	1455	1485	360	580	620	36	45	32
1400	1462	1590	1590	1675	1685	400	680	680	39	45	36
1600	1668	1820	1820	1915	1930	420	700	750	45	52	40

Technische Änderungen vorbehalten
We reserve the right to make technical modifications

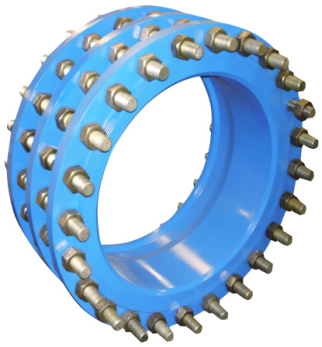

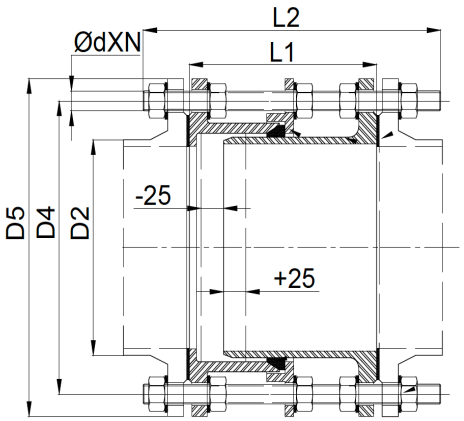

18.07.2022 - 43-PN10/PN16-0001

CTV Armaturen & Penstocks GmbH

Modell 43: Ausbaustück

aus Gusseisen mit Kugelgraphit nach EN- GJS-400-15 - PN 25

Type 43: Dismantling Joints

of ductile cast iron acc. to EN-GJS-400-15 - PN 25

DN 80 - DN 1500

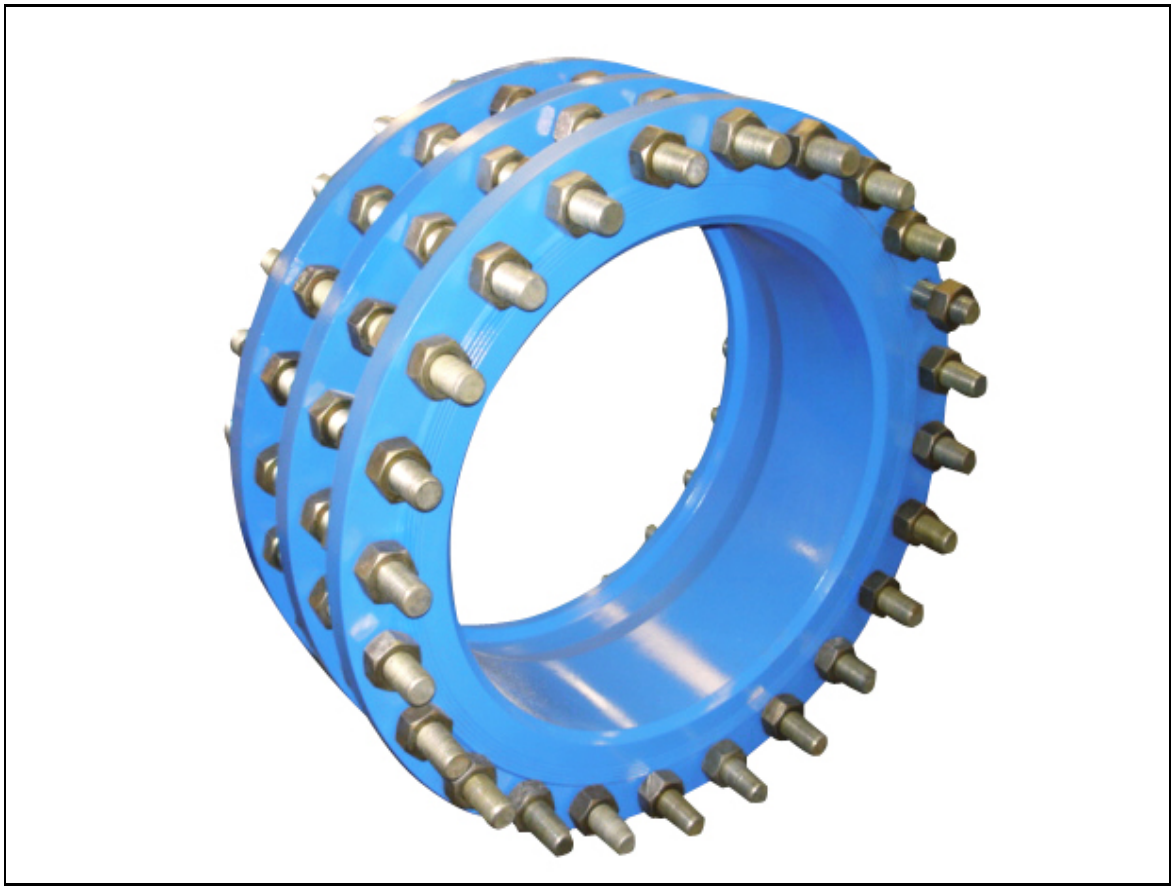

CTV Armaturen & Penstocks GmbH, Pliniusstrasse 6, 48488 Emsbüren, Deutschland
Tel: +49 (0)5903 217 6866, Email: info@ctv-valves.com

Ausbaustück
Dismantling Joint

CTV Armaturen & Penstocks GmbH

Verwendungsbereich: Abwasser Range of application: Storm water			
Nennweite Size DN	Nenndruck Pressure rating PN	Wasser-Prüfdruck in bar Hydrost. test pressure in bar Gehäuse / Body	Zulässiger Betriebsdruck in bar Admissible working pressure in bar bis 80°C / up to 80°C
80 -1500	25	37,5	25

Im Auftragsfall bitte Betriebsverhältnisse angeben.
In case of order please specify the working conditions

Werkstoffe / Zubehör, Materials / Equipment	
Katalog-Nr. / Catalogue No.	**43Z-PN25-0002**
Gehäuse / Body	GGG nach EN-GJS-400-15 / GGG acc. to EN-GJS-400-15
Sicherungsring / retainer	GGG nach EN-GJS-400-15 / GGG acc. to EN-GJS-400-15
Dichtung / Seals	EPDM / EPDM
Stehbolzen / studs	verzinkter Stahl St37 / galvanized steel St37
Mutter / nuts	verzinkter Stahl 8.8 / galvanized steel 8.8
Oberflächenschutz /Corrosion protection	Epoxy-pulverbeschichtet 250µ / epoxy powder coated 250µ

ennwei	Maße						
Size	Dimmensions						
DN	D2	D4	D5	L1	L2	d	N
80	98	160	200	200	340	16	8
100	118	190	235	200	340	20	8
125	144	220	270	200	340	24	8
150	170	250	300	200	350	24	8
200	222	310	360	220	370	24	12
250	274	370	425	230	390	27	12
300	326	430	485	245	410	27	16
350	378	490	555	250	430	30	16
400	429	550	620	260	460	33	16
450	480	600	670	275	480	33	20
500	532	660	730	280	480	33	20
600	635	770	845	305	530	36	20
700	738	875	960	305	540	39	24
800	842	990	1085	330	590	45	24
900	945	1090	1185	330	600	45	28
1000	1048	1210	1320	350	640	52	28
1200	1255	1420	1530	390	690	52	32
1400	1462	1640	1755	425	750	56	36
1500	1565	1750	1865	470	800	56	36

Technische Änderungen vorbehalten
We reserve the right to make technical modifications

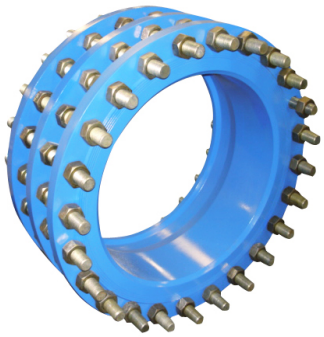

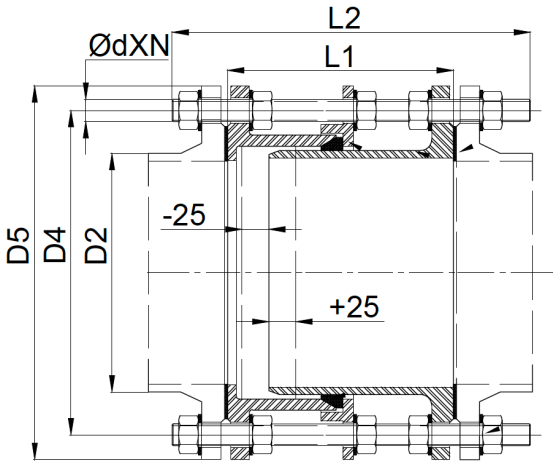

13.01.2022 - 43Z-PN25-0002

CTV Armaturen & Penstocks GmbH, Pliniusstrasse 6, 48488 Emsbüren, Deutschland
Tel: +49 (0)5903 217 6866, Email: info@ctv-valves.com

Penstocks

21

CTV Armaturen & Penstocks GmbH

Planning and realising of penstocks

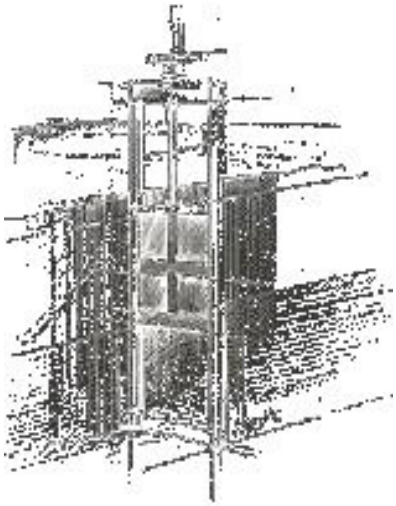

Being an internationally active company with the head-office in west of Germany we supplied many satisfied customers with our products and services around the globe. Due to our employees long-term experience in construction and realization of Penstocks, Weirs, Flaps or valves of any kind, we are in the position to provide you with the right solution for nearly every installation-situation or problems in your facilities.

To continually guarantee interference free processes of the installations made by the CTV company we particularly pay attention to a robust work design of our products according to German standard DIN 19569-4 or BS 7775 : 1995.

Penstocks are field-approved for isolating and controlling of open channels, pits, reservoirs and pipelines. CTV penstocks are used also for flow control, for keeping the sewage level, for flow throttling, for distribution of channel flow and for preventing reflux of the medium.

By means of a specially selected variety of types and by using different materials, a large choice of penstocks is available for virtually any sewage engineering requirement. They can be delivered in sizes from DN 150 to ca. DN 4000 even in rectangular or square shape. The material range includes hot dipped galvanized steel, aluminium alloy, stainless steel 304 (1.4301, 316 (1.4571) and duplex (1.4462).

Summery

Penstocks

- Handstop
- Channel Penstocks, small type
- Channel Penstock, large type
- Weir Penstocks (3 facings)
- Square penstocks with slide
- Square Penstocks with slide rails
- Circular Penstocks, welding-type seating
- Weir Penstocks (4 facings)
- Regulating Penstock
- Flap valve

Actuators

- Manual Lifting rod
- Wall bracket with sqaure cap
- Wall bracket with gear
- Wall bracket with electric actuator
- Wall bracket with wall duct
- Wall bracket with hydraulic or pneumatic actuator
- Ceilling-mounted operator
- Protruding headstock
- Central headstock
- Cross bracket on wall pillar / Operator support bracket

Penstocks

CTV Armaturen & Penstocks GmbH

Penstocks

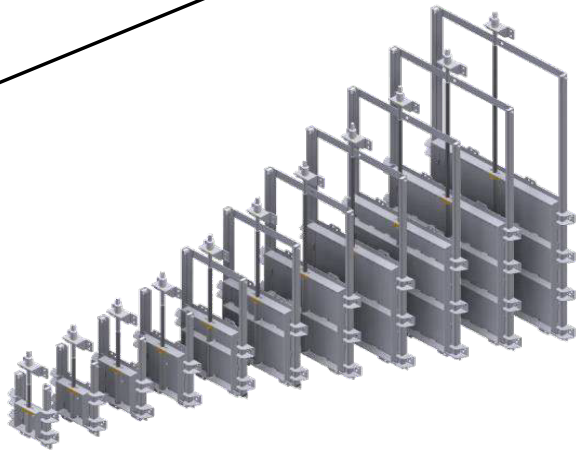

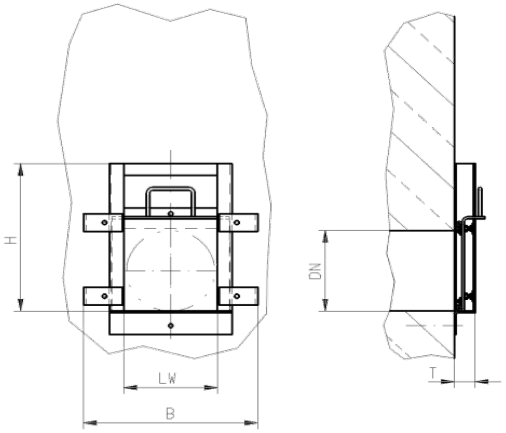

Hand Stop / Dam Plate
CTV ST3 / ST4

Application

- usable for installation in channels and outlets
- suitable for throttling and regulating purposes
- sealing on 3 or 4 faces
- for on- and off- seating pressure
- low operation forces
- dimensions: available up to 1200 x 1200
- Biggest measurements designed as dam plate

Construction features

- welded frame out of rugged bended profile
- wear-resistant slide rail screw fixed on the frame
- profile seal maintenance friendly screw fixed on the frame
- universal fixing of all actuation facilities possible.
- All stainless steel parts: Dip pickled and passivated.
- crafted according to DIN 19569-4, BSI BS 7775 and ANSI / AWWA C513-05, AWWA C561-04

Operation

- lifting handle on plate
- Dam plate lifted by crane

Fixing

- for bolting with wall seal / for bolting into the channel
- for grouting into recess
- straight sill for bolting / grouting
- round sill for grouting

Materials

Design 304L

- frame: M.-No.: 304L
- plate: M.-No.: 304L /Almg3
- seal: M.-No.: NBR / EPDM
- slide rails: M.-No.: POM
- bolts, nuts: M.-No.: 304L
- fixing material: M.-No.: 316L

Design 316L

- frame: M.-No.: 316L
- plate: M.-No.: 316L /Almg3
- seal: M.-No.: NBR / EPDM
- slide rails: M.-No.: POM
- bolts, nuts: M.-No.: 316L
- fixing material: M.-No.: 316L

- Other materials on request

CTV Armaturen & Penstocks GmbH

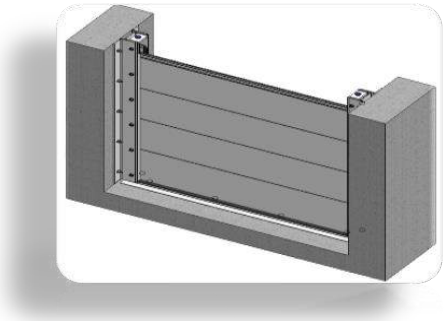

Stop Log
CTV DBV

Application

- usable for installation in channels and outlets
- suitable for throttling and regulating purposes
- sealing on 3 faces
- for on- and off- seating pressure
- low operation forces
- dimensions: available up to the biggest measurements

Construction features

- welded frame out of rugged bended profile
- wear-resistant slide rail screw fixed on the frame
- profile seal maintenance friendly screw fixed on the frame
- logs down-holder as option
- All stainless steel parts: Dip pickled and passivated.
- crafted according to DIN 19569-4, BSI BS 7775 and ANSI / AWWA C513-05, AWWA C561-04

Operation

- lifting handle
- lifting beam

Fixing

- for bolting with wall seal / for bolting into the channel
- for grouting into recess
- straight sill for bolting / grouting
- round sill for grouting

CTV Armaturen & Penstocks GmbH

Materials

Design 304L

- frame: M.-No.: 304L
- logs: M.-No.: Almg3 / 304L
- seal: M.-No.: NBR / EPDM
- slide rails: M.-No.: POM
- bolts, nuts: M.-No.: 304L
- fixing material: M.-No.: 316Ti / 316L

Design 316L

- frame: M.-No.: 316L
- logs: M.-No.: Almg3 / 316L
- seal: M.-No.: NBR / EPDM
- slide rails: M.-No.: POM
- bolts, nuts: M.-No.: 316L
- fixing material: M.-No.: 316L

- Other materials on request

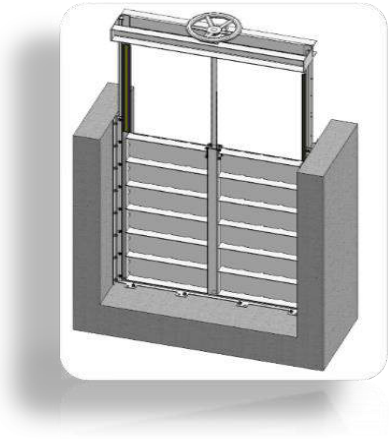

Channel Penstock CTV S3

CTV Armaturen & Penstocks GmbH

Application

- usable for installation in channels and outlets
- suitable for throttling and regulating purposes
- sealing on 3 faces
- for on- and off- seating pressure
- low operation forces
- dimensions: available up to the biggest measurements

Construction features

- welded frame out of rugged bended profile
- wear-resistant slide rail screw fixed on the frame
- profile seal maintenance friendly screw fixed on the frame
- universal fixing of all actuation facilities possible.
- All stainless steel parts: Dip pickled and passivated.
- crafted according to DIN 19569-4, BSI BS 7775 and ANSI / AWWA C513-05, AWWA C561-04

Operation

- with thrust bridge and hand wheel / gearbox / electric actuator / cylinder

Fixing

- for bolting with wall seal / for bolting into the channel
- for grouting into recess
- straight sill for bolting / grouting
- round sill for grouting

Materials

Design 304L

- frame: M.-No.: 304L
- plate: M.-No.: 304L
- seal: M.-No.: NBR / EPDM
- slide rails: M.-No.: POM
- bolts, nuts: M.-No.: 304L
- fixing material: M.-No.: 316L

Design 316L

- frame: M.-No.: 316L
- plate: M.-No.: 316L
- seal: M.-No.: NBR / EPDM
- slide rails: M.-No.: POM
- bolts, nuts: M.-No.: 316L
- fixing material: M.-No.: 316L

- Other materials on request

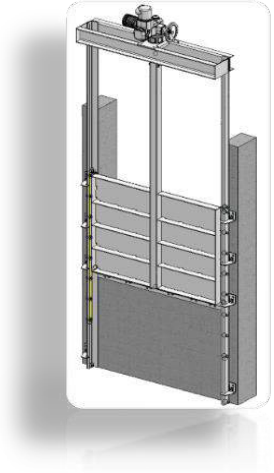

Weir Channel
Penstock CTV AS3

Application

- downward opening
- usable for installation in channels and outlets
- suitable for throttling and regulating purposes
- sealing on 3 faces
- for on- and off- seating pressure
- low operation forces
- dimensions: available up to the biggest measurements

Construction features

- welded frame out of rugged bended profile
- wear-resistant slide rail screw fixed on the frame
- profile seal maintenance friendly screw fixed on the frame
- universal fixing of all actuation facilities possible.
- All stainless steel parts: Dip pickled and passivated.
- crafted according to DIN 19569-4, BSI BS 7775 and ANSI / AWWA C513-05, AWWA C561-04

Operation

- with thrust bridge and hand wheel / gearbox / electric actuator / cylinder

Fixing

- for bolting with wall seal / for bolting into the channel
- for grouting into recess
- straight sill for bolting / grouting

Materials

Design 304L

- frame: M.-No.: 304L
- plate: M.-No.: 304L
- seal: M.-No.: NBR / EPDM
- slide rails: M.-No.: POM
- bolts, nuts: M.-No.: 304L
- fixing material: M.-No.: 316L

Design 316L

- frame: M.-No.: 316L
- plate: M.-No.: 316L
- seal: M.-No.: NBR / EPDM
- slide rails: M.-No.: POM
- bolts, nuts: M.-No.: 316L
- fixing material: M.-No.: 316L

- Other materials on request

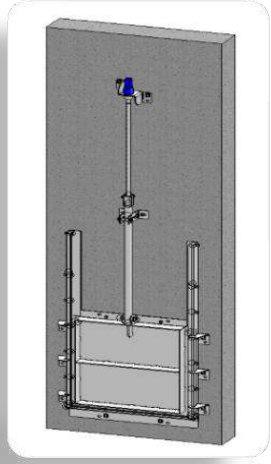

Slide Penstock
CTV S4

Application

- usable for installation at inlets and outlets of chambers and basins
- suitable for throttling and regulating purposes
- sealing on 4 faces
- for on- and off- seating pressure up to 0,4 bar
- low operation forces
- dimensions: available from 150 x150 up to 1000 x 1000

Construction features

- welded frame out of rugged bended profile
- wear-resistant slide rail screw fixed on the frame
- profile seal maintenance friendly screw fixed on the frame
- universal fixing of all actuation facilities possible.
- All stainless steel parts: Dip pickled and passivated.
- crafted according to DIN 19569-4, BSI BS 7775 and ANSI / AWWA C513-05, AWWA C561-04

Operation

- with thrust bridge and hand wheel / gearbox / electric actuator / cylinder
- on wall – bracket with square cap
- with protruding headstock and hand wheel / gearbox / electric actuator / cylinder
- with central headstock and hand wheel / gearbox / electric actuator / cylinder

Fixing

- for bolting with wall seal
- for bolting and sealing by cement mortar
- for grouting into recess
- straight sill for bolting / grouting
- round sill for grouting
- Flange DN / PN (according customer request)

Materials

Design 304L

- frame: M.-No.: 304L
- plate: M.-No.: 304L
- seal: M.-No.: NBR / EPDM
- slide rails: M.-No.: POM
- bolts, nuts: M.-No.: 304L
- fixing material: M.-No.: 316L

Design 316L

- frame: M.-No.: 316L
- plate: M.-No.: 316L
- seal: M.-No.: NBR / EPDM
- slide rails: M.-No.: POM
- bolts, nuts: M.-No.: 316L
- fixing material: M.-No.: 316L

- Other materials on request

CTV Armaturen & Penstocks GmbH

Slide Penstock
CTV S4

CTV Armaturen & Penstocks GmbH

Application

- usable for installation at inlets and outlets of chambers and basins
- suitable for throttling and regulating purposes
- sealing on 4 faces
- for on- and off- seating pressure / high pressures with static calculation on request
- low operation forces
- dimensions: available up to the biggest measurements

Construction features

- welded frame out of rugged bended profile
- wear-resistant slide rail screw fixed on the frame
- profile seal maintenance friendly screw fixed on the frame
- universal fixing of all actuation facilities possible.
- All stainless steel parts: Dip pickled and passivated.
- crafted according to DIN 19569-4, BSI BS 7775 and ANSI / AWWA C513-05, AWWA C561-04

Operation

- with thrust bridge and hand wheel / gearbox / electric actuator / cylinder
- on wall – bracket with square cap
- with protruding headstock and hand wheel / gearbox / electric actuator / cylinder
- with central headstock and hand wheel / gearbox / electric actuator / cylinder

Fixing

- for bolting with wall seal
- for bolting and sealing by cement mortar
- for grouting into recess
- straight sill for bolting / grouting
- round sill for grouting
- Flange DN / PN (according customer request)

Materials

Design 304L

- frame: M.-No.: 304L
- plate: M.-No.: 304L
- seal: M.-No.: NBR / EPDM
- slide rails: M.-No.: POM
- bolts, nuts: M.-No.: 304L
- fixing material: M.-No.: 316L

Design 316L

- frame: M.-No.: 316L
- plate: M.-No.: 316L
- seal: M.-No.: NBR / EPDM
- slide rails: M.-No.: POM
- bolts, nuts: M.-No.: 316L
- fixing material: M.-No.: 316L

- Other materials on request

pressure – opening ratio CTV S4

CTV Armaturen & Penstocks GmbH

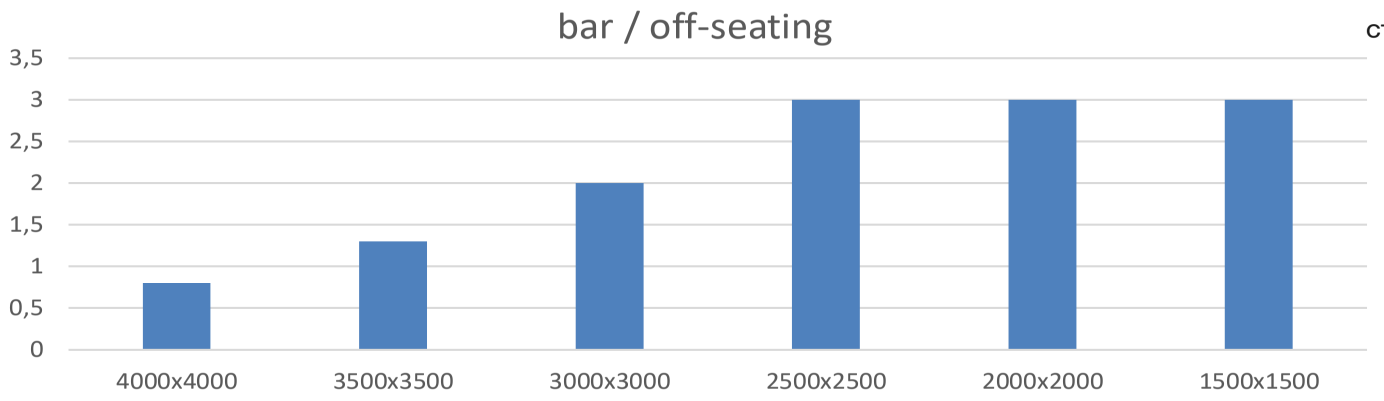

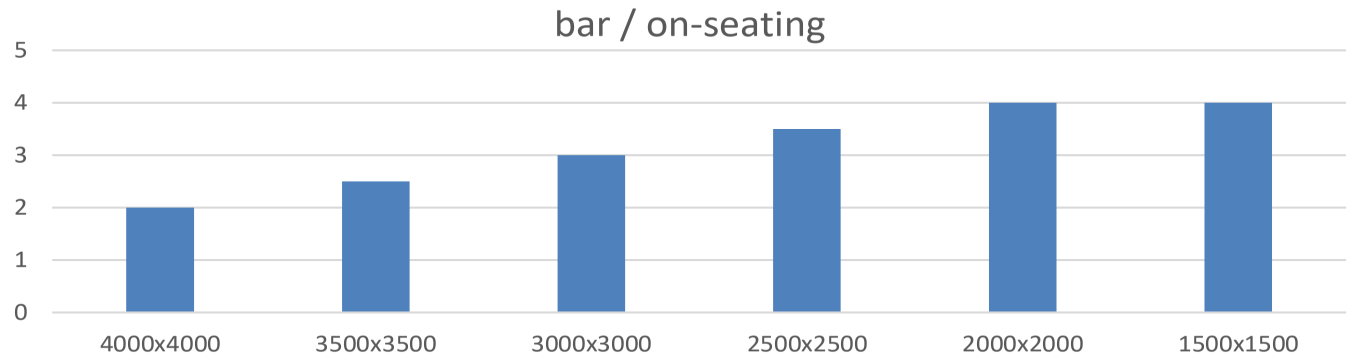

Parameter:
- stainless steel
- double lip seal
- static max. on seating (pressure on the slide plate / in the channel) - look at the on-seating diagram
- static max. off seating (pressure from the wall / off the channel) – look at the off-seating diagram
- operating pressure 0,6 bar (6 mWc) Pressure difference in relation to the upper and lower water
- wall thimble from 1,0 bar off-seating

(Analytical basis spindle bending - plate calculation / these are reference values)

Circular Penstock, wedging-type CTV WS4

Application

- usable for installation on outlets and pipe ends
- suitable for throttling and regulating purposes
- sealing on 4 faces seating by wedges (up to DN 600 with flat wedges, from DN 700 with rollers)
- for on- and off- seating pressure / high pressures with static calculation on request
- low operation forces
- dimensions: available up to the biggest measurements

Construction features

- welded frame out of rugged bended profile
- wear-resistant slide rail screw fixed on the frame
- profile seal maintenance friendly screw fixed on the frame
- universal fixing of all actuation facilities possible.
- All stainless steel parts: Dip pickled and passivated.
- crafted according to DIN 19569-4, BSI BS 7775 and ANSI / AWWA C513-05, AWWA C561-04

Operation

- with thrust bridge and hand wheel / gearbox / electric actuator / cylinder
- on wall – bracket with square cap
- with protruding headstock and hand wheel / gearbox / electric actuator / cylinder
- with central headstock and hand wheel / gearbox / electric actuator / cylinder

Fixing

- for bolting with wall seal
- Flange mounting

Materials

Design 304L

- frame: M.-No.: 304L
- plate: M.-No.: 304L
- seal: M.-No.: NBR / EPDM
- wedges: M.-No.: 304L
- bolts, nuts: M.-No.: 304L
- fixing material: M.-No.: 316L

Design 316L

- frame: M.-No.: 316L
- plate: M.-No.: 316L
- seal: M.-No.: NBR / EPDM
- wedges: M.-No.: 316L
- bolts, nuts: M.-No.: 316L
- fixing material: M.-No.: 316L

- Other materials on request

CTV Armaturen & Penstocks GmbH

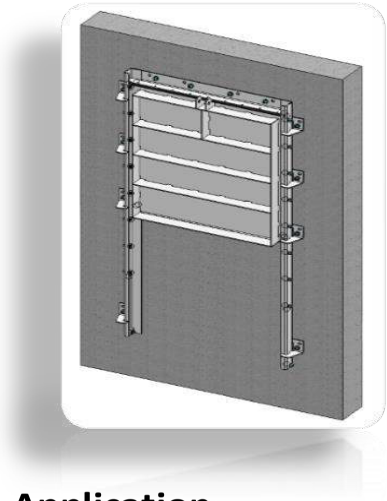

Weir Slide
Penstock CTV AS4

CTV Armaturen & Penstocks GmbH

Application

- usable for installation at inlets and outlets of chambers and basins
- suitable for throttling and regulating purposes
- sealing on 4 faces / downward opening
- for on- and off- seating pressure up to 0,4 bar
- low operation forces
- dimensions: available from 150 x150 up to available up to the biggest measurements

Construction features

- welded frame out of rugged bended profile
- wear-resistant slide rail screw fixed on the frame
- profile seal maintenance friendly screw fixed on the frame
- universal fixing of all actuation facilities possible.
- All stainless steel parts: Dip pickled and passivated.
- crafted according to DIN 19569-4, BSI BS 7775 and ANSI / AWWA C513-05, AWWA C561-04

Operation

- with thrust bridge and hand wheel / gearbox / electric actuator / cylinder
- on wall – bracket with square cap
- with protruding headstock and hand wheel / gearbox / electric actuator / cylinder
- with central headstock and hand wheel / gearbox / electric actuator / cylinder

Fixing

- for bolting with wall seal
- for bolting and sealing by cement mortar
- for grouting into recess
- straight sill for bolting / grouting

Materials

Design 304L

- frame: M.-No.: 304L
- plate: M.-No.: 304L
- seal: M.-No.: NBR / EPDM
- slide rails: M.-No.: POM
- bolts, nuts: M.-No.: 304L
- fixing material: M.-No.: 316L

Design 316L

- frame: M.-No.: 316L
- plate: M.-No.: 316L
- seal: M.-No.: NBR / EPDM
- slide rails: M.-No.: POM
- bolts, nuts: M.-No.: 316L
- fixing material: M.-No.: 316L

- Other materials on request

CTV Armaturen & Penstocks GmbH

Special Valves and Flaps

Valves / Flaps / Weirs World

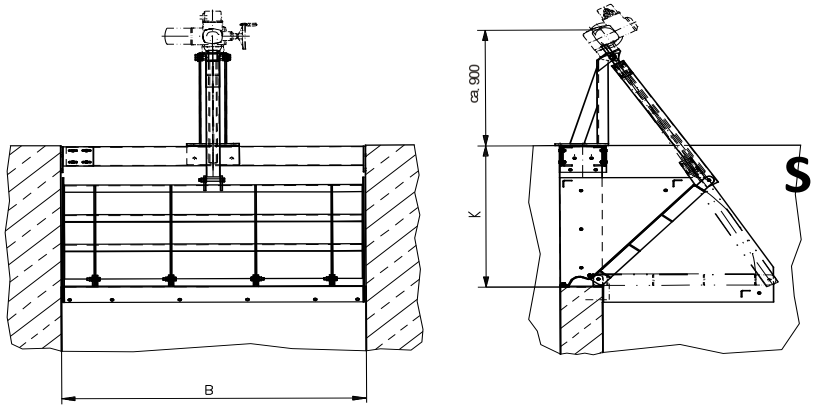

Tilting-flap Spillway CTV KW

Application

- usable for installation at outlets of chambers and basins
- suitable for level control, scum discharge, etc.
- suitable for throttling and regulating purposes
- sealing on 3 faces
- for off- seating pressure
- low operation forces
- dimensions: available up to the biggest measurements

Construction features

- welded frame out of rugged bended profile
- spillway body of torsion-proof hollow design.
- Longitudinal face: rubber tape bolted on frame and spillway body serving at the same time as bearing and articulation
- lateral faces: profile rubber attached to the spillway body
- universal fixing of all actuation facilities possible.
- All stainless steel parts: Dip pickled and passivated.
- crafted according to DIN 19569-4, BSI BS 7775 and ANSI / AWWA C513-05, AWWA C561-04

Operation

- with protruding headstock and hand wheel / gearbox / electric actuator / cylinder

Fixing

- for bolting and sealing by cement mortar
- straight sill for bolting

CTV Armaturen & Penstocks GmbH

Materials

Design 304L

- frame: M.-No.: 304L
- flap: M.-No.: 304L
- seal: M.-No.: NBR / EPDM
- slide bearing: M.-No.: POM
- bolts, nuts: M.-No.: 304L
- fixing material: M.-No.: 316L

Design 316L

- frame: M.-No.: 316L
- flap: M.-No.: 316L
- seal: M.-No.: NBR / EPDM
- slide bearing: M.-No.: POM
- bolts, nuts: M.-No.: 316L
- fixing material: M.-No.: 316L

- Other materials on request

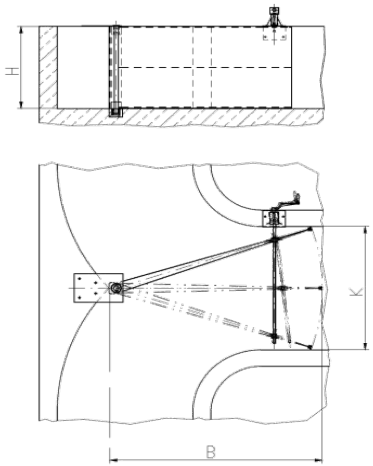

Revising Flap
CTV VZ

CTV Armaturen & Penstocks GmbH

Application

- Installation in open channel with medium dimensions, suitable for reversing or distribution of the flow medium.
- suitable for throttling and regulating purposes
- sealing on 4 faces
- for on- and off- seating pressure
- low operation forces
- dimensions: available up to the biggest measurements

Construction features

- Welded frame with pivot bearing
- baffle plate with pivoting shaft and bolted-on lateral and invert facings.
- universal fixing of all actuation facilities possible.
- All stainless steel parts: Dip pickled and passivated.
- crafted according to DIN 19569-4, BSI BS 7775 and ANSI / AWWA C513-05, AWWA C561-04

Operation

- manual operation with handwheel and gearbox.
- automatic operation by electric actuator..
- with protruding headstock and hand wheel / gearbox / electric actuator / cylinder

Fixing

- for bolting with wall seal
- for bolting and sealing by cement mortar
- for grouting into recess

Materials

Design 304L

- frame: M.-No.: 304L
- flap: M.-No.: 304L
- seal: M.-No.: NBR / EPDM
- slide bearing: M.-No.: POM
- bolts, nuts: M.-No.: 304L
- fixing material: M.-No.: 316L

Design 316L

- frame: M.-No.: 316L
- flap: M.-No.: 316L
- seal: M.-No.: NBR / EPDM
- slide bearing: M.-No.: POM
- bolts, nuts: M.-No.: 316L
- fixing material: M.-No.: 316L

- Other materials on request

Flap Valve
CTV RSK

Application

- IInstallation at retaining reservoirs, settling basins, etc., suitable as non-return device of a free-discharge or pump-pressure line.
- suitable for throttling and regulating purposes
- sealing on 4 faces
- for on- and off- seating pressure
- low operation forces
- dimensions: available up to the biggest measurements

Construction features

- Welded frame with flap bearing and flap seating off the vertical, facing inserted in frame or flap.
  The flaps are available in 3 designs:
  a) plain flap
  b) hollow-float flap
  c) flap with lever and counterweight
- At request, additionally with shock-damping seal
- All stainless steel parts: Dip pickled and passivated.
- crafted according to DIN 19569-4, BSI BS 7775 and ANSI / AWWA C513-05, AWWA C561-04

Operation

- autonomatically

Fixing

- for bolting with wall seal
- Flange mounting

Materials

Design 304L

- frame: M.-No.: 304L
- flap: M.-No.: 304L
- seal: M.-No.: NBR / EPDM
- slide bearing: M.-No.: POM
- bolts, nuts: M.-No.: 304L
- fixing material: M.-No.: 316L

Design 316L

- frame: M.-No.: 316L
- flap: M.-No.: 316L
- seal: M.-No.: NBR / EPDM
- slide bearing: M.-No.: POM
- bolts, nuts: M.-No.: 316L
- fixing material: M.-No.: 316L

- Other materials on request

CTV Armaturen & Penstocks GmbH

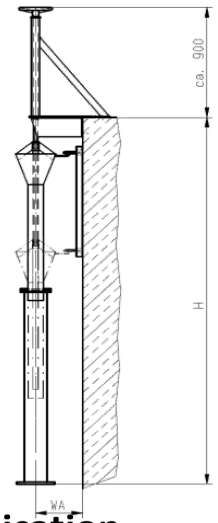

Telescopic Valve
CTV TK

CTV Armaturen & Penstocks GmbH

Application

- height adjustable drainage systems. Telescopic Valves are suitable for removing floatables or for level control in tanks low operation forces
- dimensions: available up to the biggest measurements

Construction features

- Construction welded from stainless steel
- Cylindrical or conical inlet
- Adjustable inlet pipe Seal between the inlet and outlet pipe
- All stainless steel parts: Dip pickled and passivated.
- crafted according to DIN 19569-4, BSI BS 7775 and ANSI / AWWA C513-05, AWWA C561-04

Operation

- with thrust bridge and hand wheel / gearbox / electric actuator / cylinder
- on wall – bracket with square cap
- with protruding headstock and hand wheel / gearbox / electric actuator / cylinder
- with central headstock and hand wheel / gearbox / electric actuator / cylinder

Fixing

- for bolting with wall seal
- Flange mounting

Materials

Design 304L

- tube: M.-No.: 304L
- seal: M.-No.: NBR / EPDM
- slide bearing: M.-No.: POM
- bolts, nuts: M.-No.: 304L
- fixing material: M.-No.: 316L

Design 316L

- tube: M.-No.: 316L
- seal: M.-No.: NBR / EPDM
- slide bearing: M.-No.: POM
- bolts, nuts: M.-No.: 316L
- fixing material: M.-No.: 316L

- Other materials on request

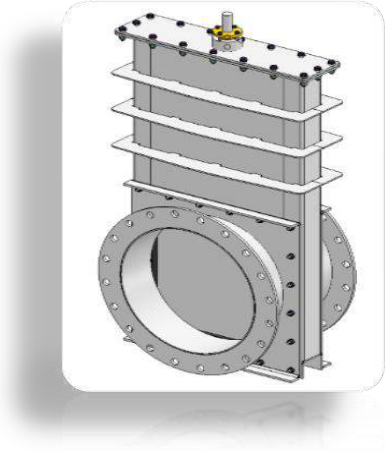

Knife Gate, fully flanged design CTV ZFS

CTV Armaturen & Penstocks GmbH

Application

- usable for installation between flanges and pipe ends
- suitable for throttling and regulating purposes
- Full-flange design, dimensions from DN 300 up to DN 1000
- for on- and off- seating pressure / high pressures with static calculation on request
- low operation forces
- dimensions: available up to the biggest measurements

Construction features

- welded frame out of rugged bended profile
- wear-resistant slide rail screw fixed on the frame
- profile seal maintenance friendly screw fixed in the frame
- universal fixing of all actuation facilities possible.
- All stainless steel parts: Dip pickled and passivated.

Operation

- on wall – bracket with square cap
- with protruding headstock and hand wheel / gearbox / electric actuator / cylinder
- with central headstock and hand wheel / gearbox / electric actuator / cylinder

Fixing

- for Flange mounting

Materials

Design 304L

- frame: M.-No.: 304L
- plate: M.-No.: 304L
- seal: M.-No.: NBR / EPDM
- bolts, nuts: M.-No.: 304L
- fixing material: not included

Design 316L

- frame: M.-No.: 316L
- plate: M.-No.: 316L
- seal: M.-No.: NBR / EPDM
- bolts, nuts: M.-No.: 316L
- fixing material: not included

- Other materials on request

CTV Armaturen & Penstocks GmbH

Actuation

Central headstock

Application

- For single stem
- Available with position indicator mechanically / electrically
- Rising or non-rising stem
- If required, with cover for protection against vandalism and atmospheric conditions

Operation

- Handwheel with plain / roller bearing
- Gearbox with handwheel
- Electric actuator
- cylinder

Construction features

- Welded construction
- Robust bearing plate adjusted to operating gear
- crafted according to DIN 19569-4, BSI BS 7775 and ANSI / AWWA C513-05, AWWA C561-04

Fixing

- for bolting

Design 304L

- Headstock M.-No.: 304L
- Stem: M.-No.: 1.4305
- Stem Nut: M.-No.: MS58
- slide bearing: M.-No.: POM
- bolts, nuts: M.-No.: 304L
- fixing material: M.-No.: 316L

Design 316 / 316L

- Headstock M.-No.: 316L
- Stem: M.-No.: 1.4404
- Stem Nut: M.-No.: RG7
- slide bearing: M.-No.: POM
- bolts, nuts: M.-No.: 316L
- fixing material: M.-No.: 316L

- Other materials on request

CTV Armaturen & Penstocks GmbH

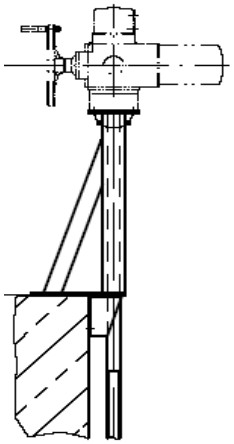

Protruding headstock

Application

- For single stem
- Available with position indicator mechanically / electrically
- Rising or non-rising stem
- If required, with cover for protection against vandalism and atmospheric conditions

Operation

- Handwheel with plain / roller bearing
- Gearbox with handwheel
- Electric actuator
- cylinder

Construction features

- Welded construction
- Robust bearing plate adjusted to operating gear
- crafted according to DIN 19569-4, BSI BS 7775 and ANSI / AWWA C513-05, AWWA C561-04

Fixing

- for bolting

Design 304L

- Headstock M.-No.: 304L
- Stem: M.-No.: 1.4305
- Stem Nut: M.-No.: MS58
- slide bearing: M.-No.: POM
- bolts, nuts: M.-No.: 304L
- fixing material: M.-No.: 316L

Design 316L

- Headstock M.-No.: 316L
- Stem: M.-No.: 1.4404
- Stem Nut: M.-No.: RG7
- slide bearing: M.-No.: POM
- bolts, nuts: M.-No.: 316L
- fixing material: M.-No.: 316L

- Other materials on request

CTV Armaturen & Penstocks GmbH

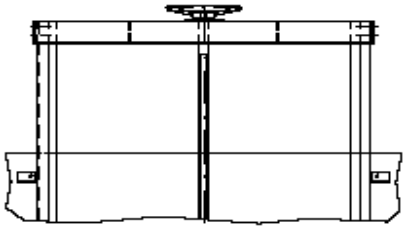

Thrust bridge / Cross bracket

CTV Armaturen & Penstocks GmbH

Application

- For single or double stem
- Available with position indicator mechanically / electrically
- Rising or non-rising stem

Operation

- Square cap with plain / roller bearing
- Handwheel with plain / roller bearing
- Gearbox with handwheel
- Electric actuator
- cylinder

Construction features

- Welded construction
- Robust bearing plate adjusted to operating gear
- crafted according to DIN 19569-4, BSI BS 7775 and ANSI / AWWA C513-05, AWWA C561-04

Fixing

- On penstock frame

Design 304L

- Bridge M.-No.: 304L
- Stem: M.-No.: 1.4305
- Stem Nut: M.-No.: MS58
- slide bearing: M.-No.: POM
- bolts, nuts: M.-No.: 304L
- fixing material: M.-No.: 316L

Design 316L

- Bridge M.-No.: 316L
- Stem: M.-No.: 1.4404
- Stem Nut: M.-No.: RG7
- slide bearing: M.-No.: POM
- bolts, nuts: M.-No.: 316L
- fixing material: M.-No.: 316L

- Other materials on request

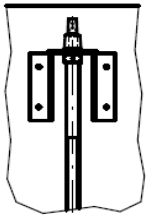

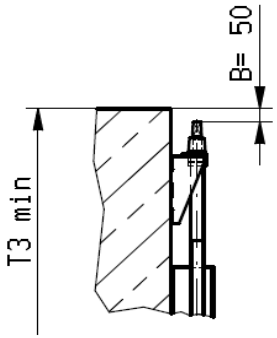

Wall bracket

Application

- For single stem
- Available with position indicator mechanically / electrically
- Rising or non-rising stem

Operation

- Square cap with plain / roller bearing
- Handwheel with plain / roller bearing
- T-Key
- Gearbox with handwheel
- Electric actuator
- cylinder

Design 304L

- Bracket M.-No.: 304L
- Stem: M.-No.: 1.4305
- Stem Nut: M.-No.: MS58
- slide bearing: M.-No.: POM
- bolts, nuts: M.-No.: 304 / 304L
- fixing material: M.-No.: 316L

Design 316 / 316L

- Bracket M.-No.: 316L
- Stem: M.-No.: 1.4404
- Stem Nut: M.-No.: RG7
- slide bearing: M.-No.: POM
- bolts, nuts: M.-No.: 316L
- fixing material: M.-No.: 316L

- Other materials on request

Construction features

- Welded construction
- Robust bearing plate adjusted to operating gear
- crafted according to DIN 19569-4, BSI BS 7775 and ANSI / AWWA C513-05, AWWA C561-04

Fixing

- for bolting

CTV Armaturen & Penstocks GmbH

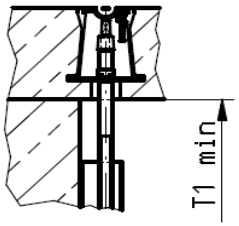

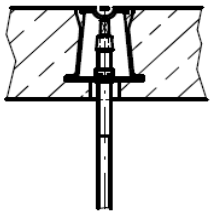

Ceiling mounted operation

CTV Armaturen & Penstocks GmbH

Application

- For single stem
- Available with position indicator mechanically / electrically
- non-rising stem
- Available with pressure tight wall bushing
- Street cap as option

Construction features

- Welded construction
- Robust bearing
- crafted according to DIN 19569-4, BSI BS 7775 and ANSI / AWWA C513-05, AWWA C561-04

Operation

- Square cap with plain / roller bearing
- T-Key

Fixing

- for grouting into ceiling recess

Design 304L

- Housing M.-No.: 304L
- Stem: M.-No.: 1.4305
- Stem Nut: M.-No.: MS58
- slide bearing: M.-No.: POM
- bolts, nuts: M.-No.: 304L
- fixing material: M.-No.: 316L

Design 316 / 316L

- Housing M.-No.: 316L
- Stem: M.-No.: 1.4404
- Stem Nut: M.-No.: RG7
- slide bearing: M.-No.: POM
- bolts, nuts: M.-No.: 316L
- fixing material: M.-No.: 316L

- Other materials on request

Stem extension devices thrust tubes

CTV Armaturen & Penstocks GmbH

Application

- Operation handling
- Stem extension
- Rising or non-rising stem

Construction features

- Welded construction
- Robust design
- crafted according to DIN 19569-4, BSI BS 7775 and ANSI / AWWA C513-05, AWWA C561-04

Operation

- All kinds

Fixing

- for bolting

Design 304L

- Extension rod guide: M.-No.: 304L
- Extension rod.: 1.4305
- Stem Nut: M.-No.: MS58
- Square cap: M.-No.: cast iron painted
- bolts, nuts: M.-No.: 304L
- fixing material: M.-No.: 316L

Design 316L

- Extension rod guide: M.-No.: 316L
- Extension rod.: 316L
- Stem Nut: M.-No.: RG7
- Square cap: M.-No.: cast iron painted
- bolts, nuts: M.-No.: 316L
- fixing material: M.-No.: 316L

- Other materials on request

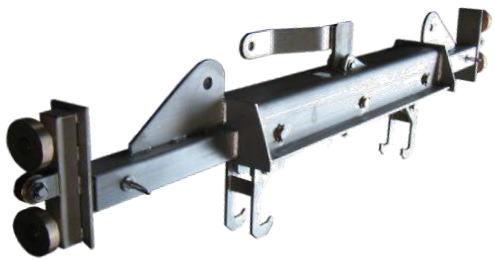

Stop Log lifting spreader

CTV Armaturen & Penstocks GmbH

Application

- Operation handling

Construction features

- Welded construction
- Robust design
- crafted according to DIN 19569-4, BSI BS 7775 and ANSI / AWWA C513-05, AWWA C561-04

Operation

- Lifting beam / spreader by crane

Design 304L

- spreader: M.-No.: 304L
- handle.: 304L

Design 316L

- spreader: M.-No.: 316L
- handle.: 316L

- Other materials on request

Gallery

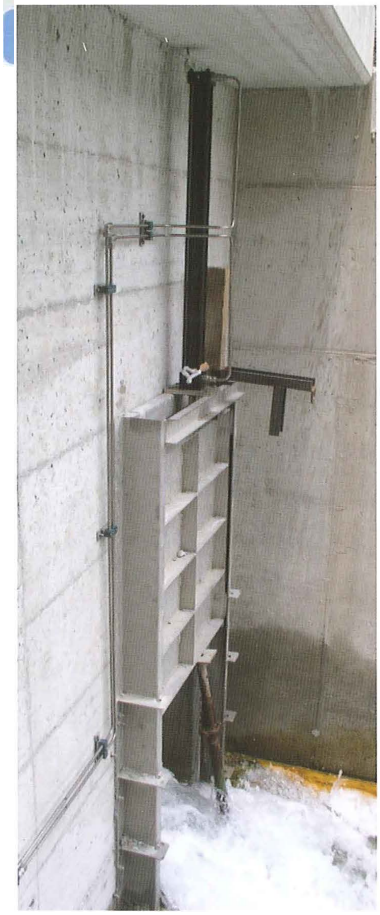

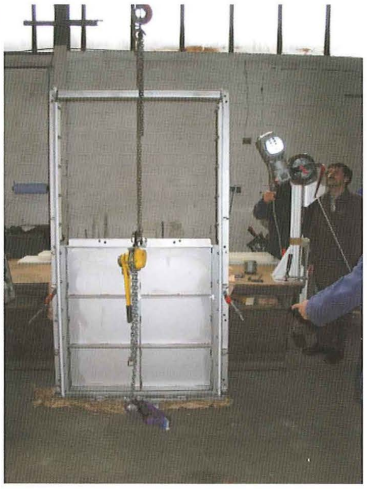

Products

Group	
01	Resilient Seated Gate Valves
02	Metal Seated Gate Valves
05	Knife Gate Valves
06	Check Valves
09	Butterfly Valves
10	Wafer Butterfly Valves
11	Air Release Valves
13	Plunger / Needle Valves
14	Strainers
43	Dismantling Joints
21	Penstocks - Sluice Gate Valve

We reserve the right to make changes without prior notice

CTV Armaturen & Penstocks GmbH

Issue Date 12/2022

CTV Armaturen & Penstocks GmbH
Pliniusstraße 6 · D-48488 Emsburen
Telefon +49 (0)5903 217 68 66

info@ctv-valves.com · www.ctv-valves.com